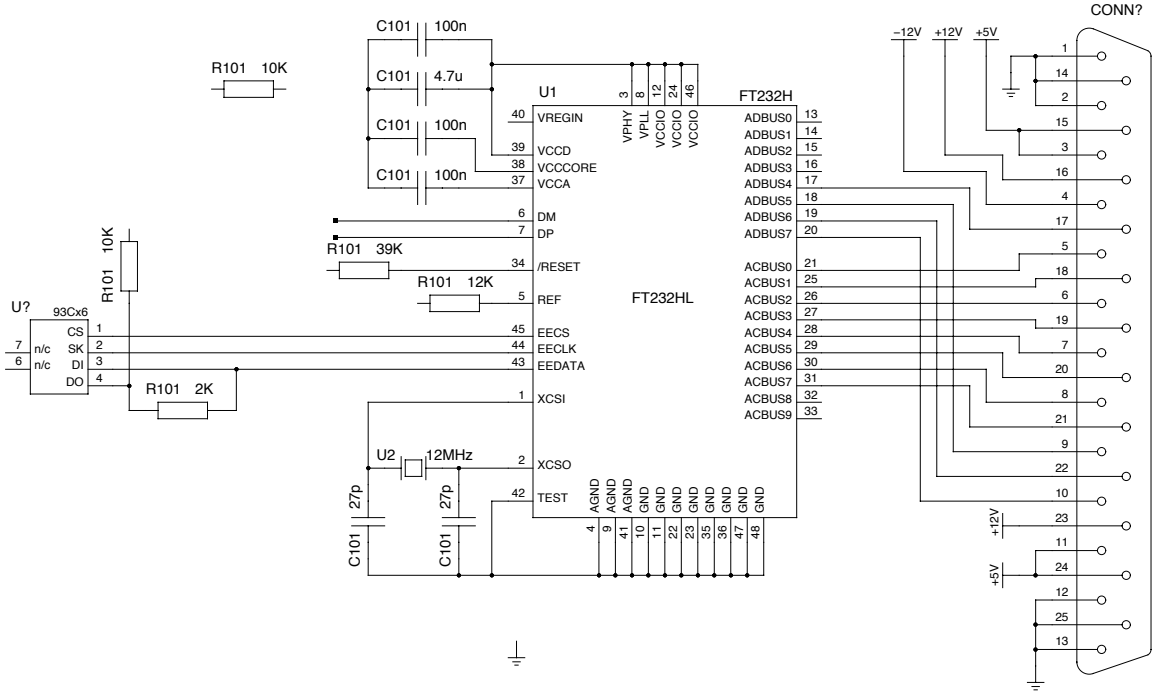

R101 needs to be 1%

Place all power related capacitors close to the VCC pins

TITLE ALL−03 USB adapter	
FILE: all−03−usb.sch	REVISION: 0.0 (04−Jan−2014)
PAGE 1 OF 1	DRAWN BY: Michael Kukat