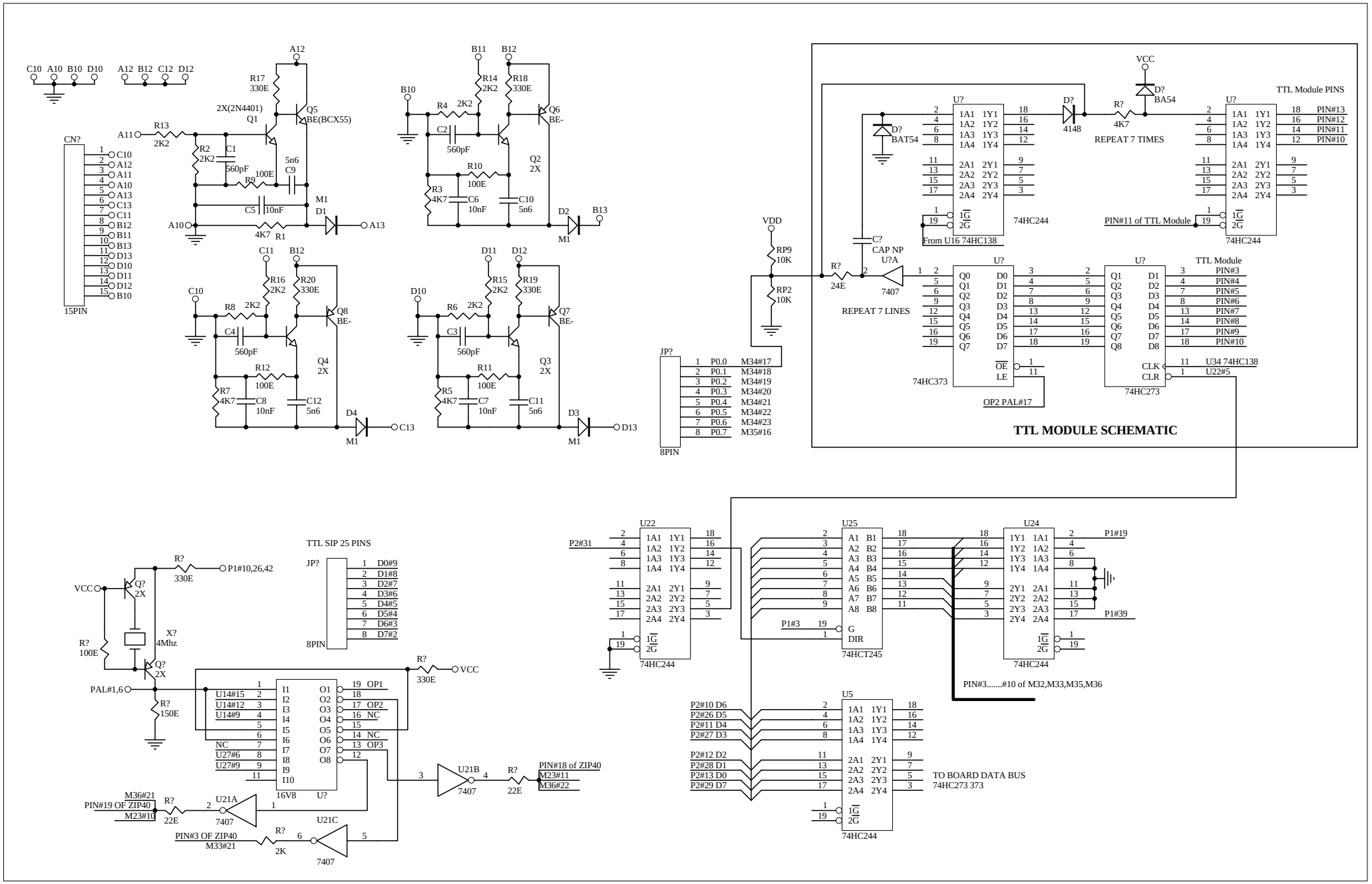
TTL MODULE SCHEMATIC
TTL Module PINS
TTL SIP 25 PINS
CN?
15PIN
JP?
8PIN
U22
74HC244
U25
74HCT245
U24
74HC244
U5
74HC244
TO BOARD DATA BUS
74HC273 373
U?
74HC244
From U16 74HC138
REPEAT 7 TIMES
REPEAT 7 LINES
74HC373
74HC273
OP2 PAL#17
PIN#11 of TTL Module
PIN#3.....#10 of M32,M33,M35,M36
PIN#18 of ZIP40
PIN#19 OF ZIP40
PIN#3 OF ZIP40
16V8
U?
7407
X?
4Mhz
VCC
VDD