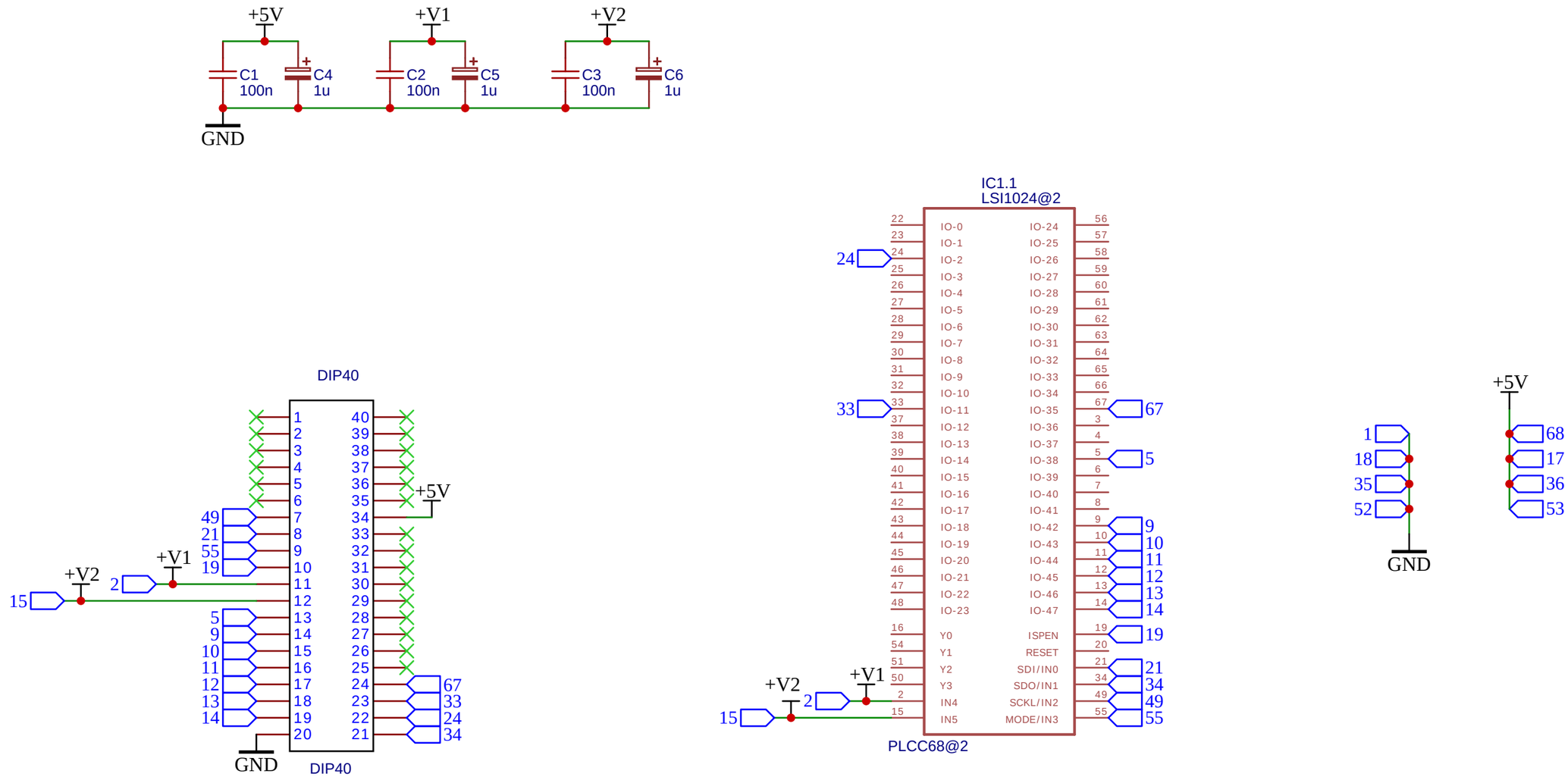

Base socket is only for expand pin distances, connection is 1->1, 2->2 ...

TITLE: ADP-PLSI-PL68 P/N:04-1689		REV: 1.0
	Company:	Sheet: 1/1
	Date: 2026-01-18 Drawn By: theocoar	