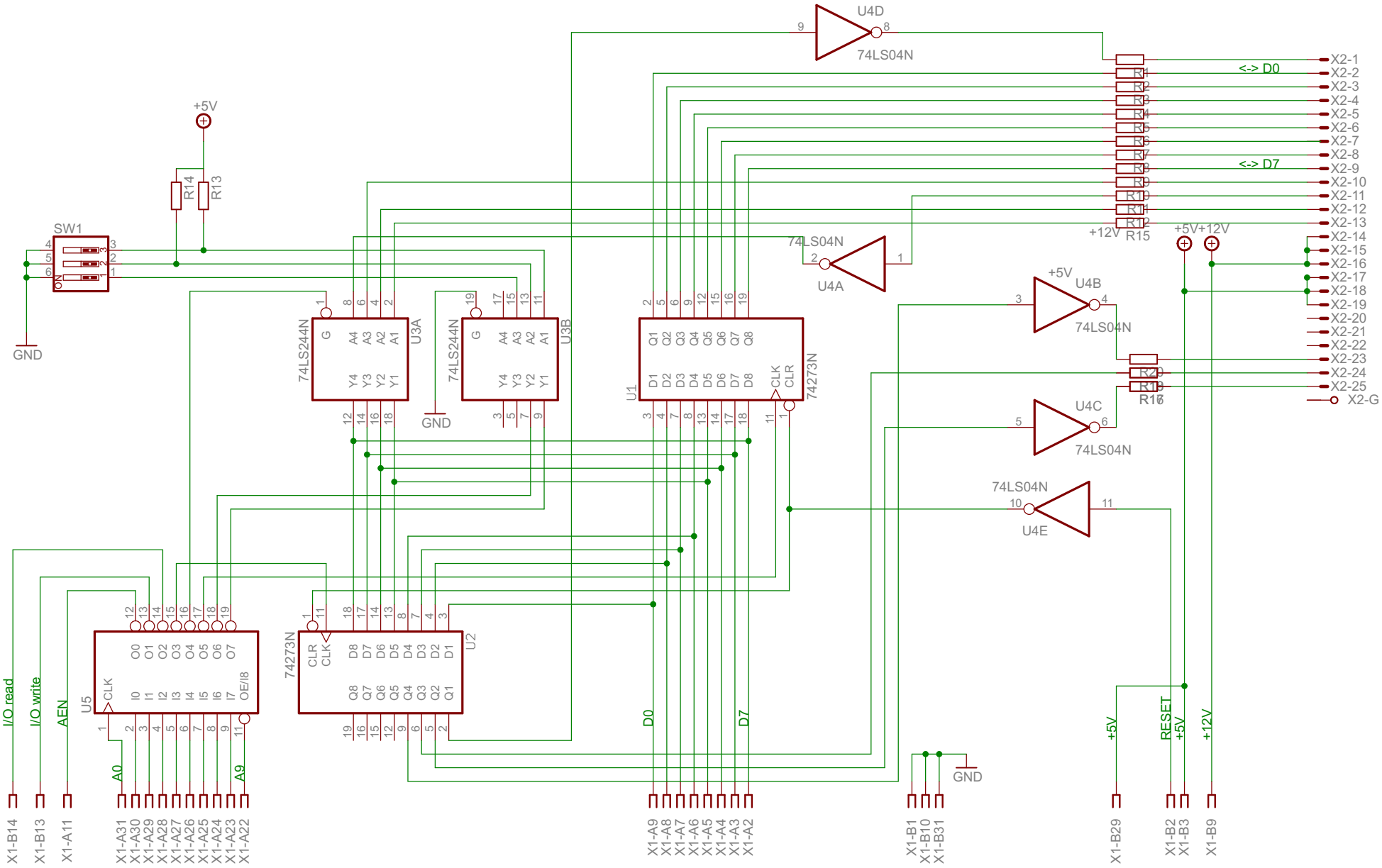

4. 11. 2011 21:09:48 Z:\install\hardware\all07\ISA.sch (Sheet: 1/1)