TMS1122
TMS1121

1. TMS1121 UNIVERSAL TIMER CONTROLLER FEATURE SUMMARY

- 20 daily or weekly programmable timer sets
- Memory display of programmed timer sets for swtiches and day of week
- 4 independent switch outputs with buffer
- Display day of week, AM/PM, switch, clock ON/OFF/SLEEP status
- Key entry forclock set and timer set
- 50Hz or 60Hz clock synchronization
- Single 9 volt power supply
- Reliable 28 pin plastic package

2. DESCRIPTION

The TMS1121 is a TMS1100 four-bit microcomputer containing universal timer algorithm in the ROM. This standard timer is developed to meet wide range of timer applications.

Fig. 1 shows universal timer system block diagram.
The system has 20 keys, 4 switch output, displays for clock, day of week, switches, AM/PM and ON/OFF/SLEEP status. In addition, pulse shaper for 50/60Hz AC line goes into K8 of TMS1121.

3. FUNCTIONS

(1) Display
- Day of Week, AM/PM, 12 HOUR CLOCK
- Switch LED's for switch 1, 2, 3, 4
- ON, OFF, SLP LED's

(2) Clock
- 12 Hours AM/PM and one week clock
- ±0.02% Accuracy based on 50Hz AC line
- Time Unit - one minute
- Key entry for clock set

(3) Memory for timer sets
- 20 timer sets by weekly, daily or interval time

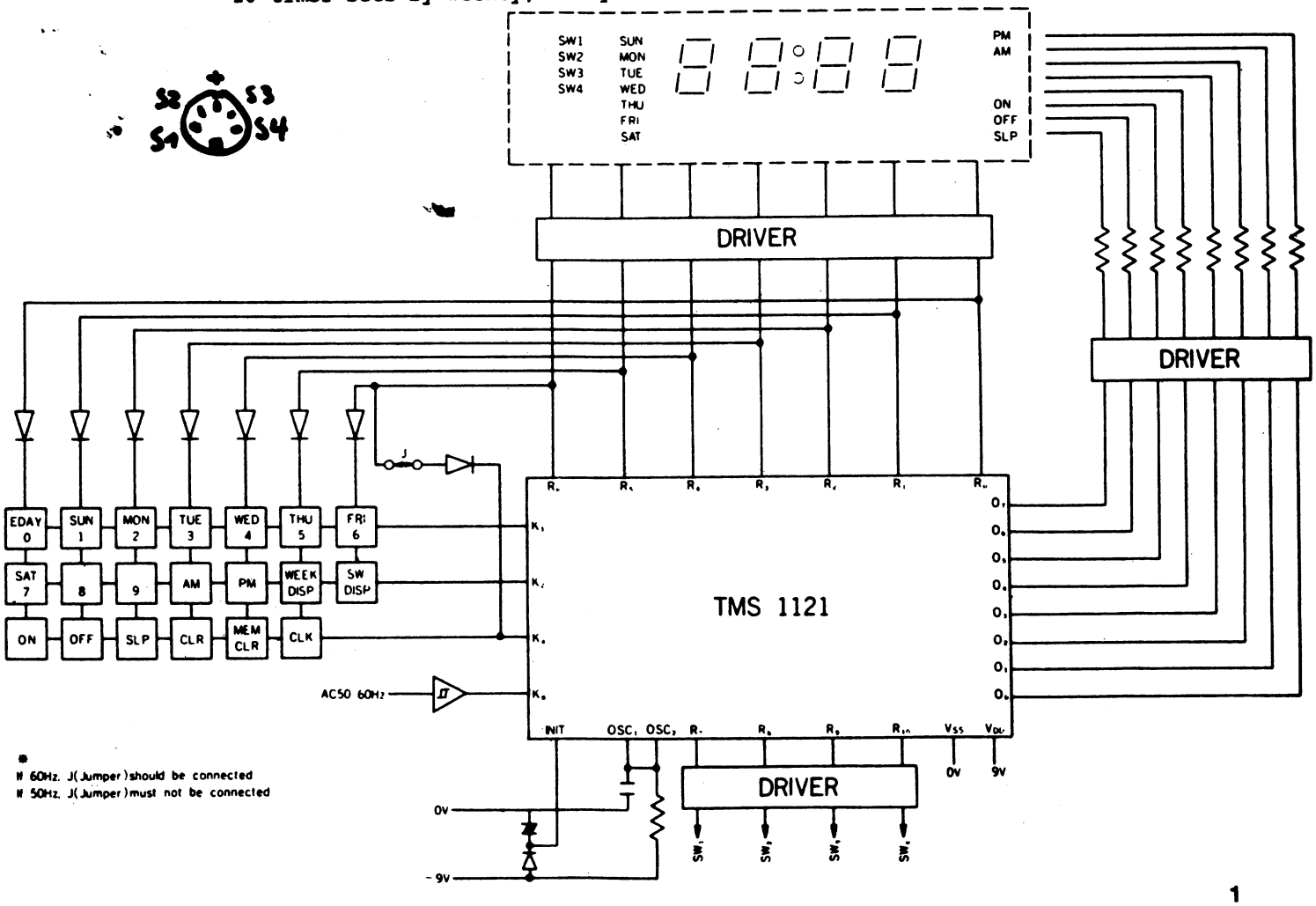

(4) Memory display

- Display programmed timer sets according to switch number
- Display programmed timer sets according to day of week and every day

(5) Memory clear

- Clear all memory
- Clear memory for one switch
- Clear memory for one day of week

(6) Power down display

- Display power down status by AM/PM display blinking

(7) Switch outputs

- 4 switch outputs - independent in functions

(8) Timer setting

Timer setting based on time interval

- Maximum interval time - 11 hours 59 minutes
  ON, OFF, SLEEP can be used for interval time.

  Note: Interval Time set will be erased after execution of ON, OFF, SLEEP

Timer setting based on 12 hours AM/PM clock

- Timer set by weekly or daily

  Note: Timer set by 12 hours clock will remain in the memory after execution of ON, OFF, SLEEP
  --Repeatable

ON, OFF, SLEEP (SLP) functions

ON - Memorize what time switch is on
OFF - Memorize what time switch is off
SLP - Memorize what time switch is on and Keep the switch on for one hour -- automatic off

(9) Direct operation of switch outputs

ON, OFF and SLP can be operated directly from key without use of clock or time interval.

(10) Key inputs

Double functions key inputs

E. DAY/O	-	Every day or Numeric 0
SUN/1	-	Sunday or Numeric 1
MON/2	-	Monday or Numeric 2
TUS/3	-	Tuesday or Numeric 3
WED/4	-	Wednesday or Numeric 4
THU/5	-	Thursday or Numeric 5
FRI/6	-	Friday or Numeric 6
SAT/7	-	Saturday or Numeric 7
SW/DISP	-	Switch or Display of memory for switch
WEEK/DISP	-	Week or Display of memory for day of week and Every day

Single function key inputs

8	-	Numiric 8
9	-	Numeric 9
AM	-	AM setting
PM	-	PM setting
ON	-	ON setting
OFF	-	OFF setting
SLP	-	SLEEP setting
CLR	-	Clear entry and error
MEM CLR	-	Clear Memory
CLK	-	Clock setting

4. OPERATION

(1) Power on

When power is on, AM/PM displays will be blinking.
If CLK key is pushed, Sunday, PM, 12:00 will be displayed
-- default value

(2) Clock setting

Key sequence to set clock for Saturday 8:30AM

[SAT] [WEEK] [AM] [8] [3] [0] [CLK]

Note: Do not push SW key during time setting.

(3) Timer setting

A. Timer setting using 12 Hours clock

(a) ON setting

[1] [SW] [SAT] [WEEK] [AM] [1] [1] [3] [0] [ON]

Set switch 1 to be ON at 11:30 AM on Saturday.

If you want to do short cut for entry on next operation

[PM] [1] [3] [0] [OFF]

Set switch 1 to be OFF at 1:30 PM on Saturday.

(b) OFF setting

[2] [SW] [MON] [WEEK] [PM] [3] [0] [0] [OFF]

Set switch 2 to be OFF at 3:00 PM on Monday.
Short key entry for next operation.

[PM] [3] [3] [0] [ON]

Set switch 2 to be ON at 3:30 PM on Monday.

(c) SLP setting

[3] [SW] [TUS] [WEEK] [PM] [3] [2] [0] [SLP]

Set switch 3 to be ON at 3:20 PM on Tuesday and OFF after one hour.

Short key entry for next oepration.

[PM] [5] [3] [0] [ON]

Set switch 3 to be ON at 5:30 PM on Tuesday.

B. Timer setting using interval time

Maximum interval time is 11 hours and 59 minutes.

(a) ON setting

[1] [SW] [1] [3] [0] [ON]

Set switch 1 to be ON after one and half hours from now.
Short key entry for next operation.

[2] [3] [0] [OFF]

Set switch 1 to be OFF after two and half hours from now.

(b) OFF setting

[4] [SW] [1] [0] [OFF]

Set switch 4 to be OFF after 10 minutes from now.
Short key entry for next operation.

[3] [C] [ON]

Set switch 4 to be ON after 30 minutes from now.

(c) SLP setting

[2] [SW] [1] [2] [0] [SLP]

Set switch 2 to be ON after 1 hour and 20 minutes and OFF after one hour from start time.
Short key entry for next operation.

[3] [3] [0] [ON]

Set switch 3 to be ON after three and half hours from now.

Note: Timer set by interval time will be erased from memory after execution of programmed timer set.

(4) Memory clear

There are three ways to clear memory as follows:

(a) Clear all memory

[MEM CLR] [MEM CLR]

(b) Clear memory for one switch

[2] [SW] [MEM CLR]

Clear memory for SW2 timer sets.

(c) Clear memory for day of week

[MON] [WEEK] [MEM CLR]

Clear memory for Monday timer sets.

(5) Direct control of switches without using clock

[1] [SW] [ON]

Switch 1 will be directly ON immediately.

[4] [SW] [OFF]

Switch 4 will be directly OFF immediately.

[2] [SW] [SLP]

Switch 2 will be directly ON for one hour -- automatic off after one hour.

(6) Memory display

[1] [SW] [SW/ DISP] [SW/ DISP] ..... [SW/ DISP]

Memory for switch 1 will be displayed every double entries of [SW/ DISP]

[SUN] [WEEK] [WEEK/ DISP] [WEEK/ DISP] ..... [WEEK/ DISP]

Memory for Sunday will be displayed every double entries of [WEEK/ DISP]

[E.DAY] [WEEK/ DISP] [WEEK/ DISP] ..... [WEEK/ DISP]

Memory for Every Day will be displayed every double entries of [WEEK/ DISP]

(7) Correction for Miss Operation

Two ways to correct miss operation.

(a) You can re-enter any key to correct data before

[CLK], [SLP], [ON], [OFF], [MEM CLR] keys entry.

(b) Use CLR key and re enter correct data

[3] [SW] [4] [SW] [MON] [WEEK] [PM] [1] [0] [0] [ON]

Miss Operation — Correct data

Set switch 4 to be ON at 1:00 PM on Monday.

[SW] [2] [CLR] [4] [SW] [1] [0] [ON]

Set switch 4 to be ON after 10 minutes.

(8) Error Display

(a) Error for timer setting

[1] [SW] [1] [5] [0] [0] [ON]

DISPLAY shows 9999 to indicate interval timer exceeding 11 hours and 59 minutes.

[CLK] [MON] [WEEK] [1] [8] [0] [0] [CLK]

DISPLAY shows 9999 to indicate this clock is not 24 hours clock.

(b) Error for Memory Capacity Over

If you try to memorize more than 20 timer sets, display 8888 to indicate over capacity.

Note: You can memorize up to 20 sets for any switch or day of week as far as total timer sets is less than or equal to 20.

(9) Overlapped Timer Sets for Same Switch Output

(a) Case 1

Memory location	PROGRAMMED TIMER SETS								
Memory 1	1	SW	MON	WEEK	PM	1	0	0	ON
Memory 2	1	SW	MON	WEEK	PM	1	0	0	OFF
Memory 3	1	SW	MON	WEEK	PM	1	0	0	ON

Result of above overlapped timer sets is SW1 to be ON at 1:00 PM on Monday.

(b) Case 2

Assume Switch 1 is already ON.

Memory location	PROGRAMMED TIMER SETS								
Memory 1	1	SW	MON	WEEK	AM	1	3	0	OFF
Memory 2	1	SW	MON	WEEK	AM	1	1	5	SLP

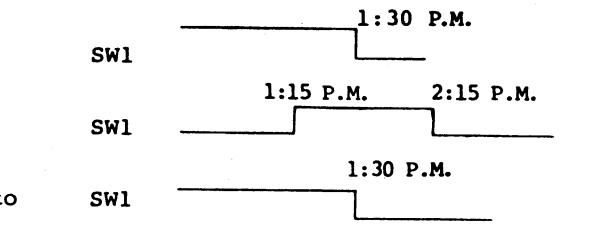

Result of above overlapped timers sets is SW1 to be OFF at 1:30 AM on Monday.

5. TMS1121 ELECTRICAL SPECIFICATIONS

(1) Absolute Maximum Ratings over Operating Free-Air Temperature Range (Unless Otherwise Noted)*

Voltage applied to any device terminal..... -15V
(see Note 1)
Supply voltage, V_{DD} ..... -15V to 0.3V
Data input voltage ..... -15V to 0.3V
Clock input voltage ..... -15V to 0.3V
Average output current (see Note 2)
O outputs ..... -24mA
R outputs ..... -14mA
Peak output current: O outputs ..... -48mA
R outputs ..... -28mA
Continuouts power dissipation:
TMS 1121NL 400mW
Operating free-air temperature range ..... 0°C to 70°C
Storage temperature range ..... -55°C to 150°C

*Stresses beyond those listed under "Absolute Maximum Ratings" may cause permanent damage to the device. This is a stress rating only and functional operation of thedevice at these or any other conditions beyond those indicated in the "Recommended Operating Conditions" section of this specification is not implied. Exposure to absolute maximum rated conditions for extended periods may affect device reliability.

(2) Recommend Operating Conditions

PARAMETER		MIN	NOM	MAX	UNIT
Supply voltage, V_{DD} (see Note 3)		-8	-9	-10	V
High-level input voltage, V_{IH} (see Note 4)	K	-1.0	-0.8	0.3	V
	INIT or Clock	-1.0	-0.8	0.3	
Low-level input voltage, V_{IL}	K	V_{DD}		-4	V
	INIT or Clock	V_{DD}	-9	-6	
Clock Cycle time, $t_c(\phi)$		2.5	3	10	uS
Instruction cycle time, t_c		15		60	uS
Pulse width, clock high, t_w (ϕH)		1			uS
Pulse width, clock low, t_w (ϕL)		1			uS
Sum of rise time and pulse width, clock high, $t_r + t_w$ (ϕH)		1.25			uS
Sum of fall time and pulse width, clock low, $t_f + t_w$ (ϕL)		1.25			uS
Oscillator frequency, f_{osc}		100		400	kHz
Operating free-air temperature, T_A		0		70	°C

Notes: 1. Unless otherwise noted all voltages are with respect to V_{SS}.
2. These average values apply for any 100ms period.
3. Ripple must not exceed 0.2 volts peak to peak in the operating frequency range.
4. The algebraic convention where the most-positive (least-negative) limit is designated as maximum is used in this specification for logic voltage levels only.

Note: Timing points are 90% (high) and 10% (low)

EXTERNALLY DRIVEN CLOCK INPUT WAVE FORM

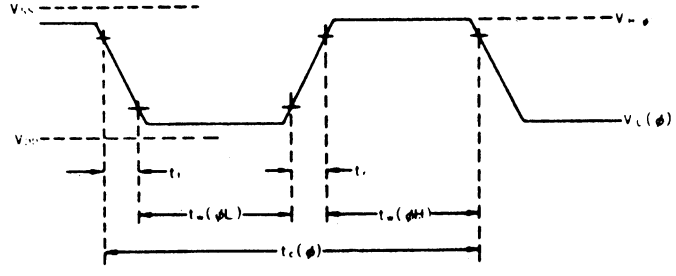

(3) Electrical Characteristics over Recommended Operating Air Temperature Range (Unless Otherwise Noted)

	PARAMETER	TEST CONDITIONS	MIN	TYP*	MAX	UNIT
I_I	Input current, K inputs	V_I = 0V	40	100	300	uA
	High-level output voltage (see Note 1) O outputs	I_O = -10 mA	-1.1	-0.6		V
	R outputs	I_O = -2 mA	-0.75	-0.4		
I_{OL}	Low-level output current	V_{OL} = V_{DD}			-100	uA
I_{DD}	Average Supply current from V_{DD}	All outputs open		-4	-7	mA
P(AV)	Average power dissipation	All outputs open		40	70	mW
f_{osc}	Internal oscillator frequency	R_{ext}=50 k ,C_{ext}=47pF	250	300	350	kHz
C_I	Small-signal input capacitance, K inputs	V_I = 0, f = 1kHz		10		pF
$C_I(\phi)$	Input capacitance, clock input	V_I = 0, f = 100kHz		25		pF

*All typical values are at V_{DD} = -9V, T_A = 25°C.

Note: 1. The algebraic convention where the most-positive (least-negative) limit is designated as maximum is used in this specification for logic voltage levels only.

TYPICAL A.C. OUTLET SWITCHING CIRCUIT FOR THE UNIVERSAL TIMER

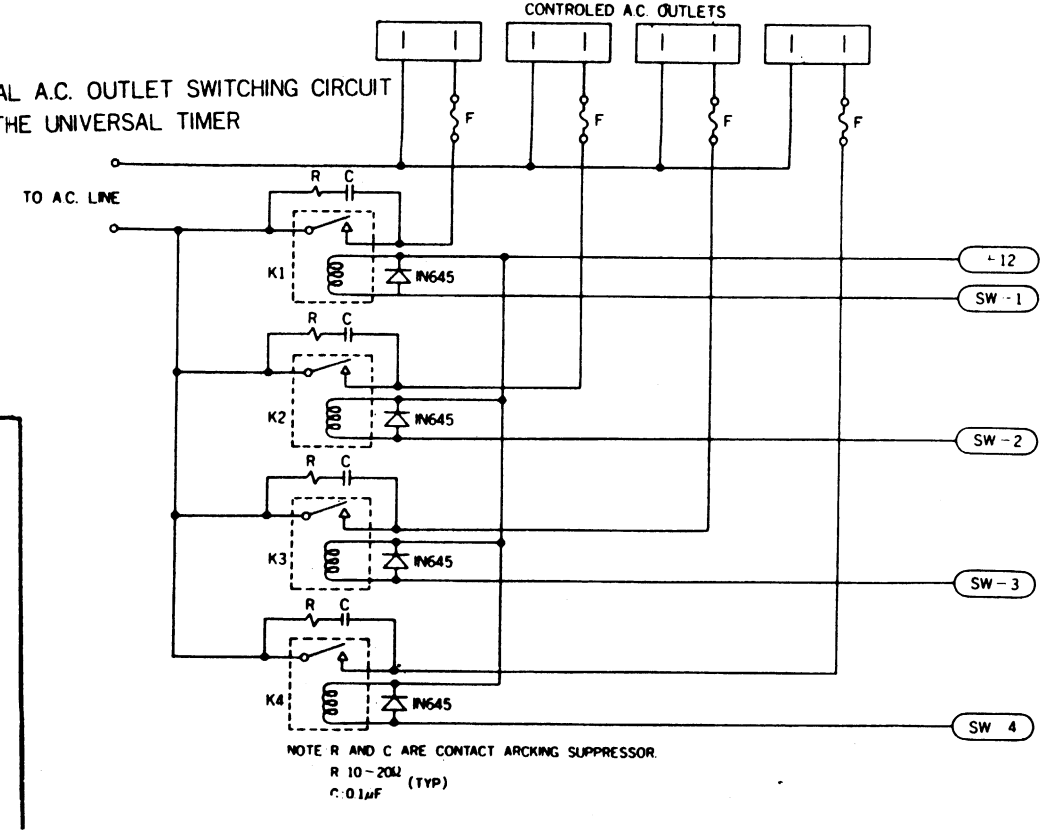

TYPICAL POWER SUPPLY FOR THE UNIVERSAL TIMER

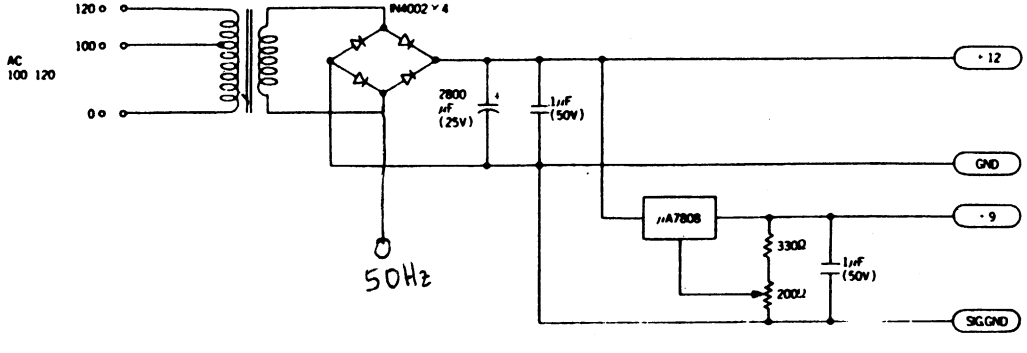

UTM-002 DISPLAY KEYBOARD(UNIVERSAL TIMER)

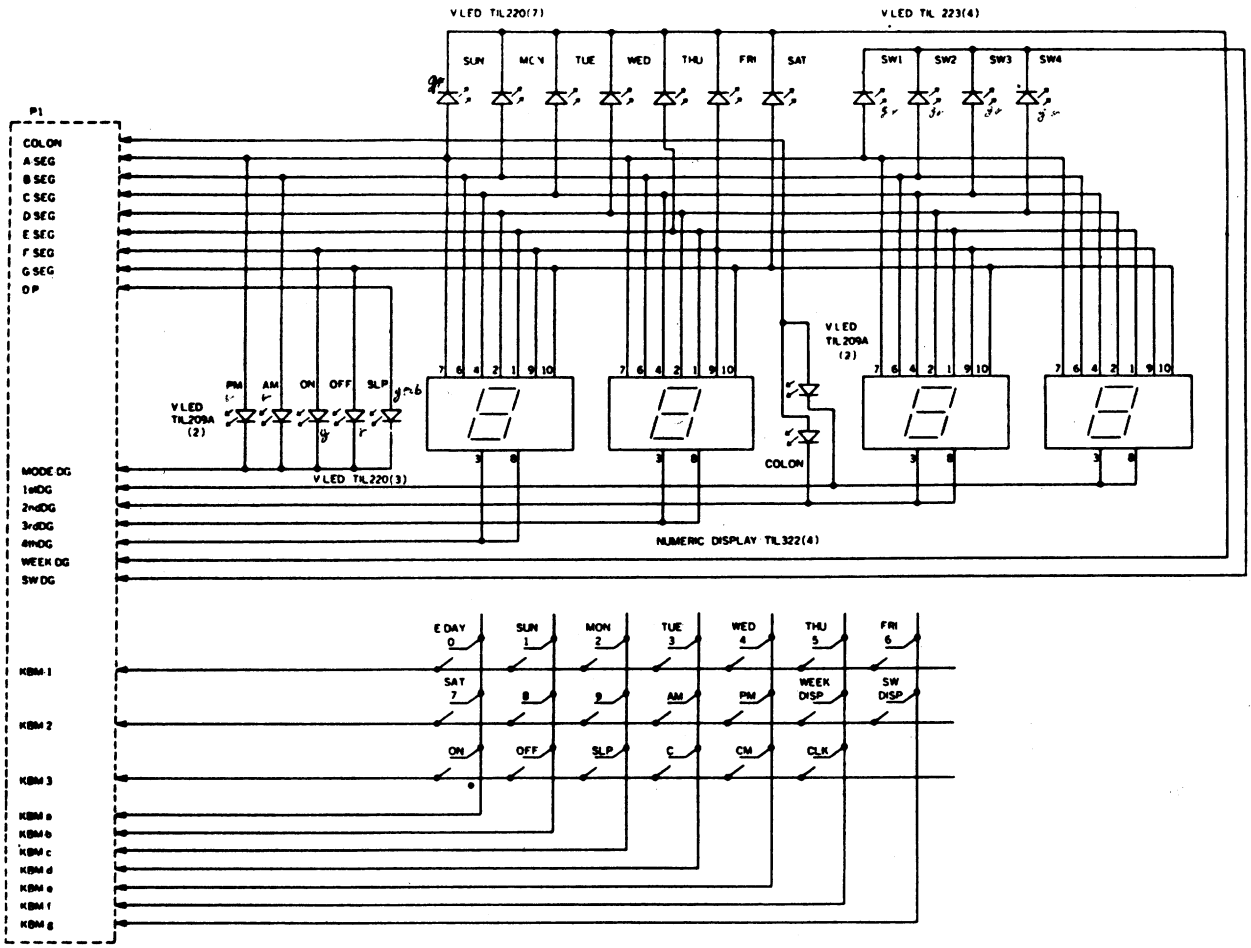

UTM-001 CPU (UNIVERSAL TIMER CPU BOARD)

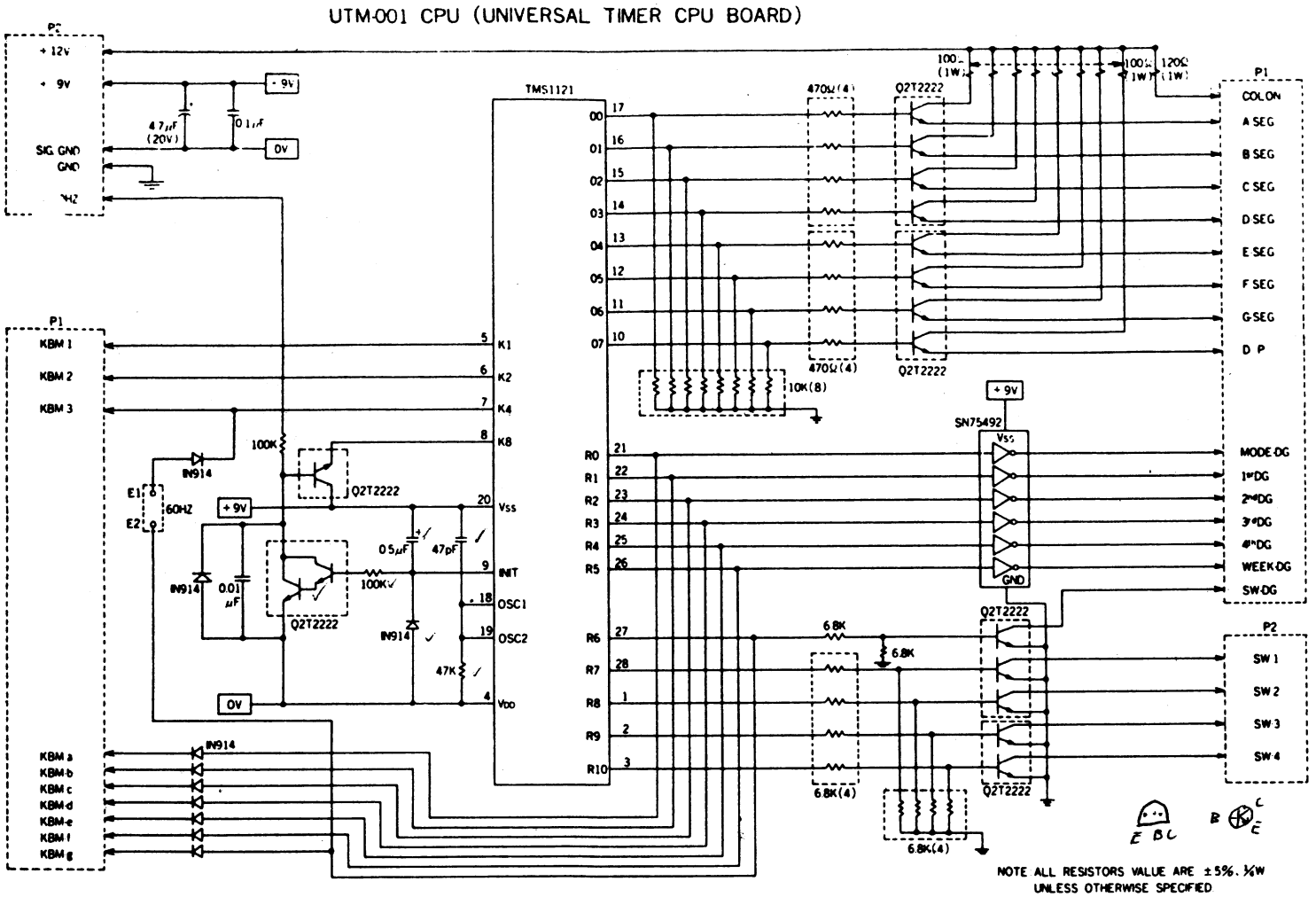

NOTE ALL RESISTORS VALUE ARE ±5%, ¼W
UNLESS OTHERWISE SPECIFIED
E1, E2:CONNECTION FOR 60HZ OPERATION

X