Converter power supply

Mains connecting

Order number 6911 15 05

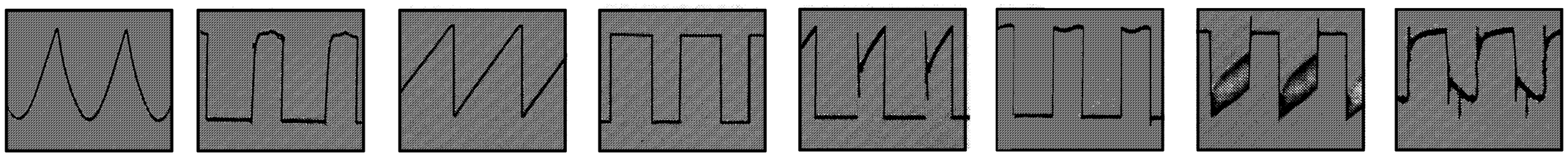
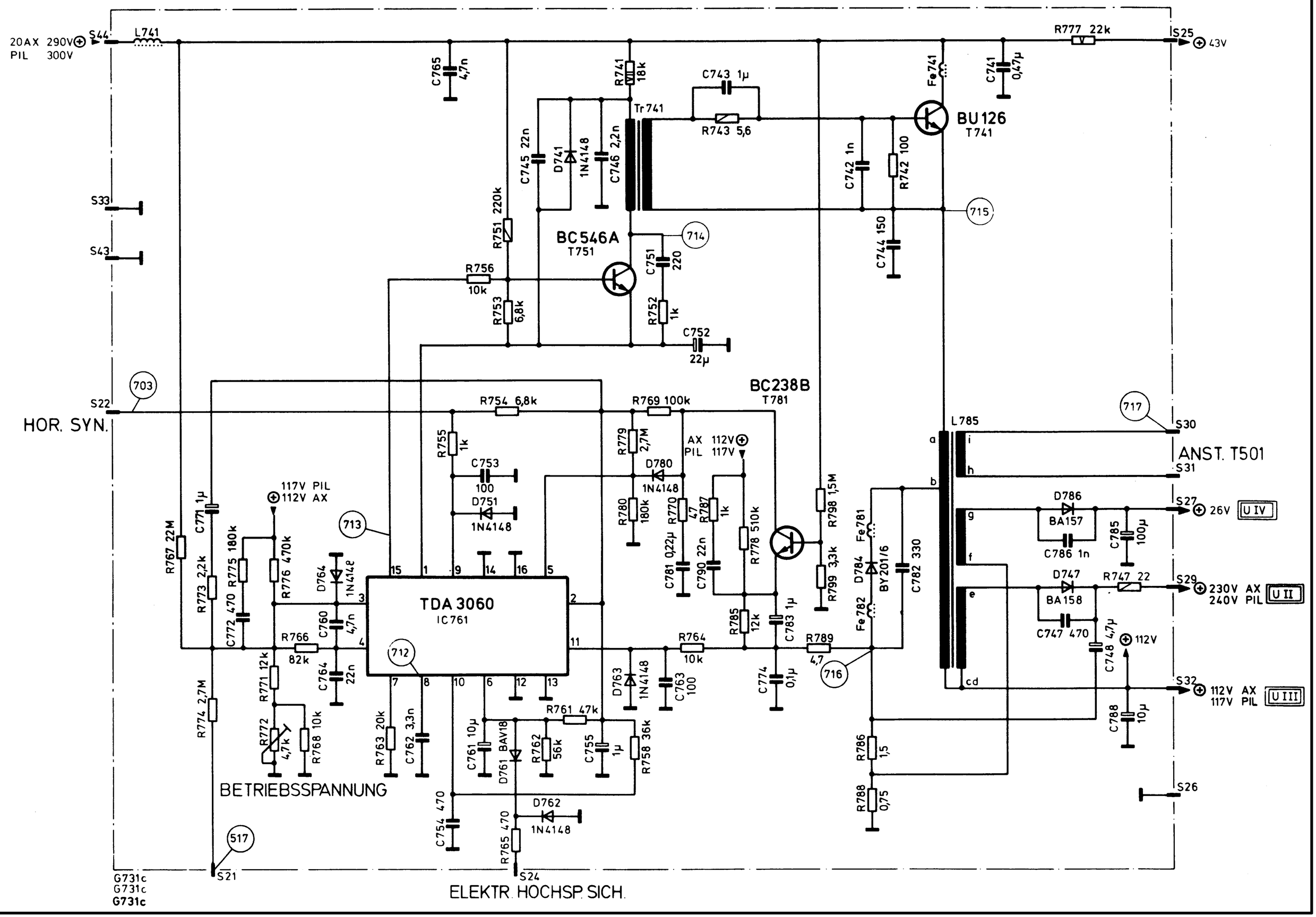
517 20Vss V | 703 9V H | 712 5Vss H | 713 25Vss H | 714 40Vss H | 715 340Vss H | 716 2,5Vss H | 717 15Vss H