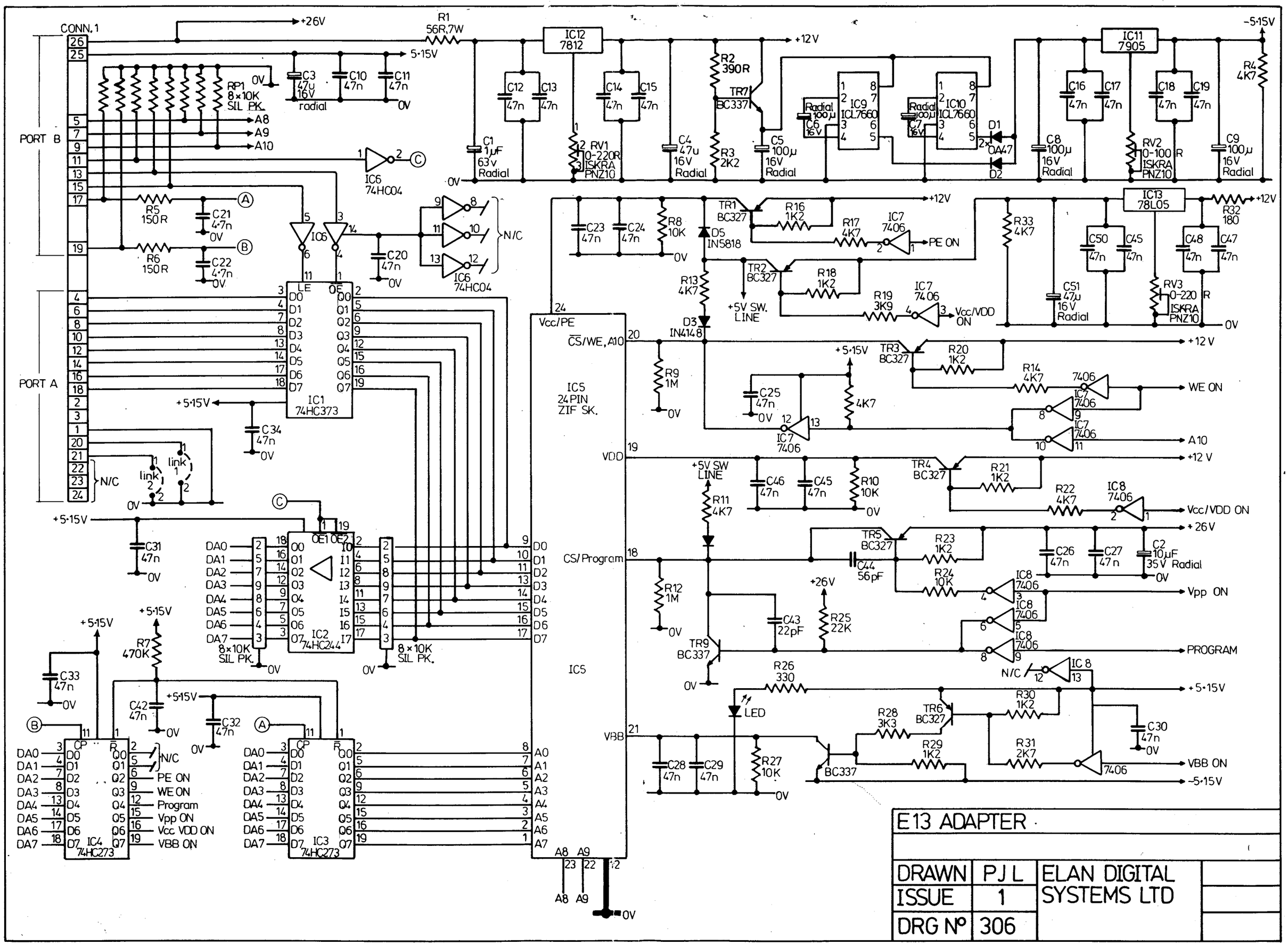
CONN. 1
PORT B
PORT A
N/C
+26V
5·15V
R1 56R,7W
IC12 7812
IC11 7905
-5·15V
R4 4K7
RP1 8×10K SIL PK.
C3 47u 16V radial
C10 47n
C11 47n
C12 47n
C13 47n
C14 47n
C15 47n
C16 47n
C17 47n
C18 47n
C19 47n
R2 390R
TR7 BC337
IC9 ICL7660
IC10 ICL7660
D1 OA47
D2
C8 100µ 16V Radial
RV2 10-100 ISKRA PNZ10
C9 100µ 16V Radial
C1 1µF 63V Radial
RV1 10-220R ISKRA PNZ10
C4 47u 16V Radial
R3 2K2
C5 100µ 16V Radial
IC6 74HC04
R5 150R
R6 150R
C21 4·7n
C22 4·7n
C20 47n
IC1 74HC373
C34 47n
link 1
link 2
C31 47n
IC2 74HC244
8×10K SIL PK.
R7 470K
C33 47n
C42 47n
C32 47n
IC4 74HC273
IC3 74HC273
PE ON
WE ON
Program
Vpp ON
Vcc VDD ON
VBB ON
IC5 24PIN ZIF SK.
Vcc/PE
CS/WE, A10
VDD
CS/Program
VBB
C23 47n
C24 47n
R8 10K
D5 IN5818
TR1 BC327
R16 1K2
R17 4K7
IC7 7406
R13 4K7
TR2 BC327
R18 1K2
R19 3K9
+5V SW. LINE
D3 IN4148
Vcc/VDD ON
R9 1M
TR3 BC327
R20 1K2
R14 4K7
C25 47n
R10 10K
C46 47n
C45 47n
R11 4K7
TR4 BC327
R21 1K2
R22 4K7
IC8 7406
R12 1M
TR5 BC327
R23 1K2
C44 56pF
R24 10K
C26 47n
C27 47n
C2 10µF 35V Radial
C43 22pF
R25 22K
TR9 BC337
R26 330
LED
R27 10K
C28 47n
C29 47n
BC337
TR6 BC337
R28 3K3
R29 1K2
R30 1K2
R31 2K7
C30 47n
IC13 78L05
R32 180
R33 4K7
C51 47µ 16V Radial
C50 47n
C45 47n
C48 47n
C47 47n
RV3 0-220 ISKRA PNZ10
VBB ON
E13 ADAPTER
DRAWN PJ L
ISSUE 1
DRG Nº 306
ELAN DIGITAL SYSTEMS LTD