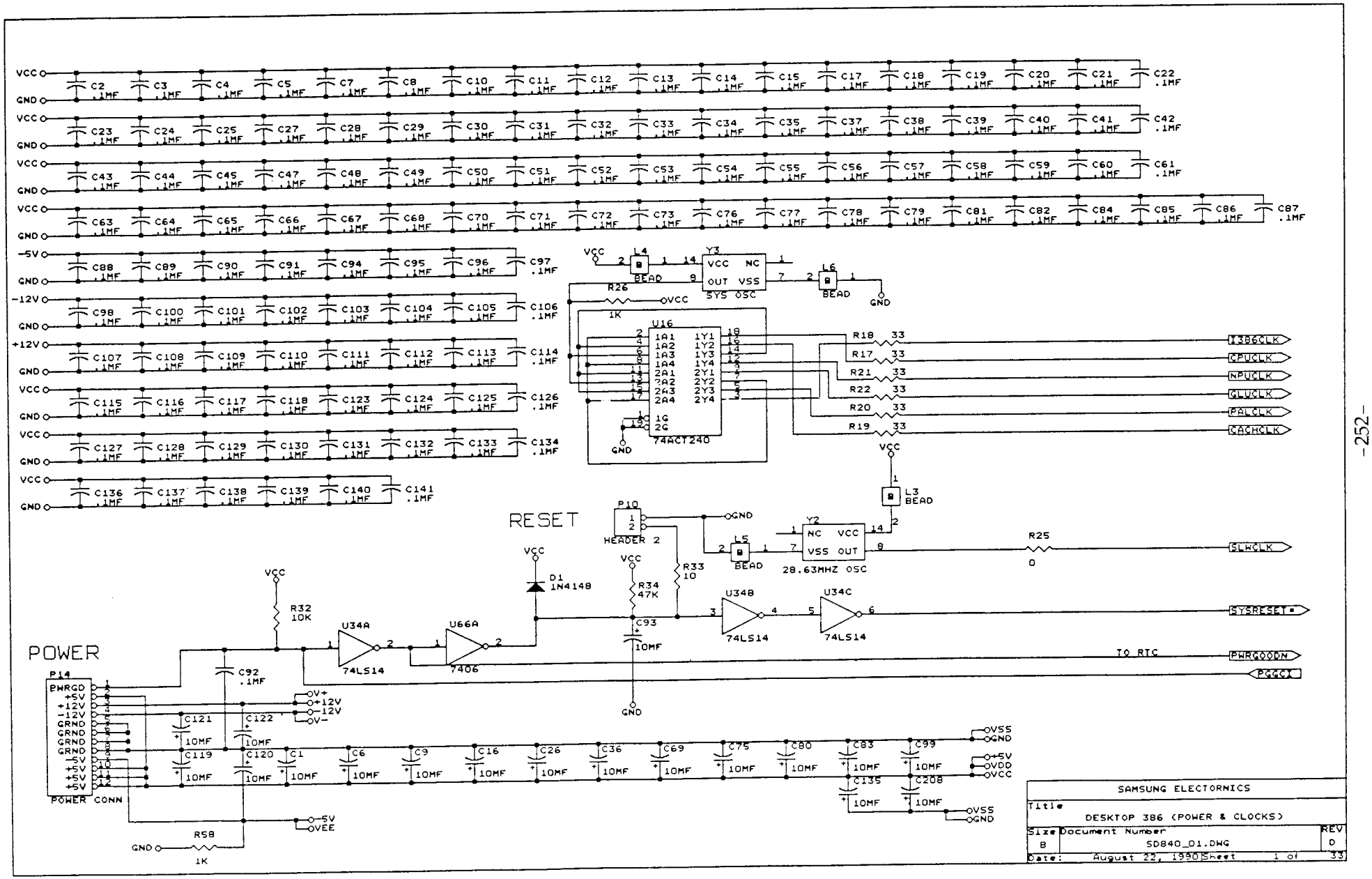

SAMSUNG ELECTORNICS

Title: DESKTOP 386 (POWER & CLOCKS)

Size: B | Document Number: SD840_01.DWG | REV: D

Date: August 22, 1990 | Sheet 1 of 33

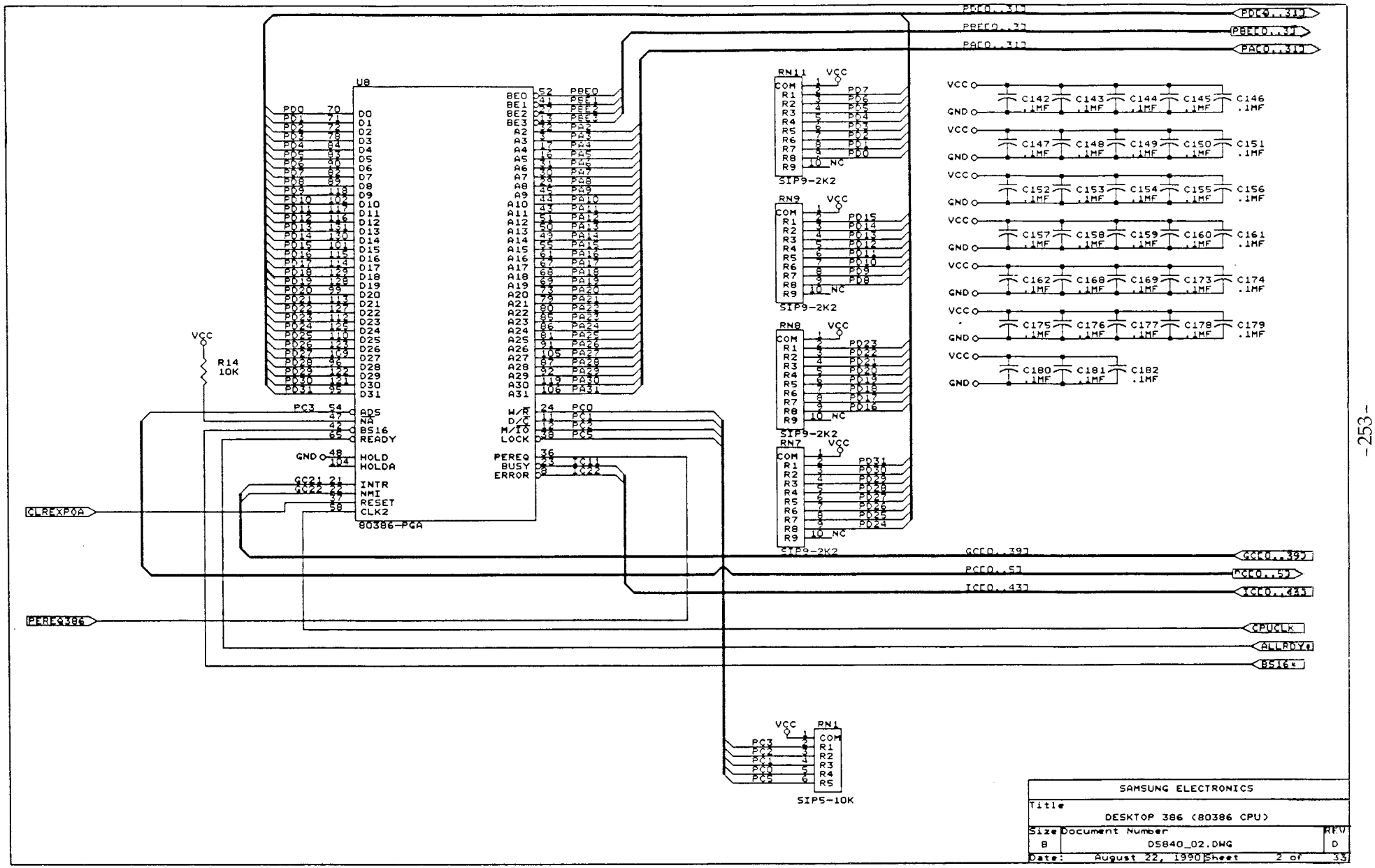

SAMSUNG ELECTRONICS		
Title: DESKTOP 386 (80386 CPU)		
Size: B	Document Number: D5840_02.DWG	REV: D
Date: August 22, 1990	Sheet 2 of 33	

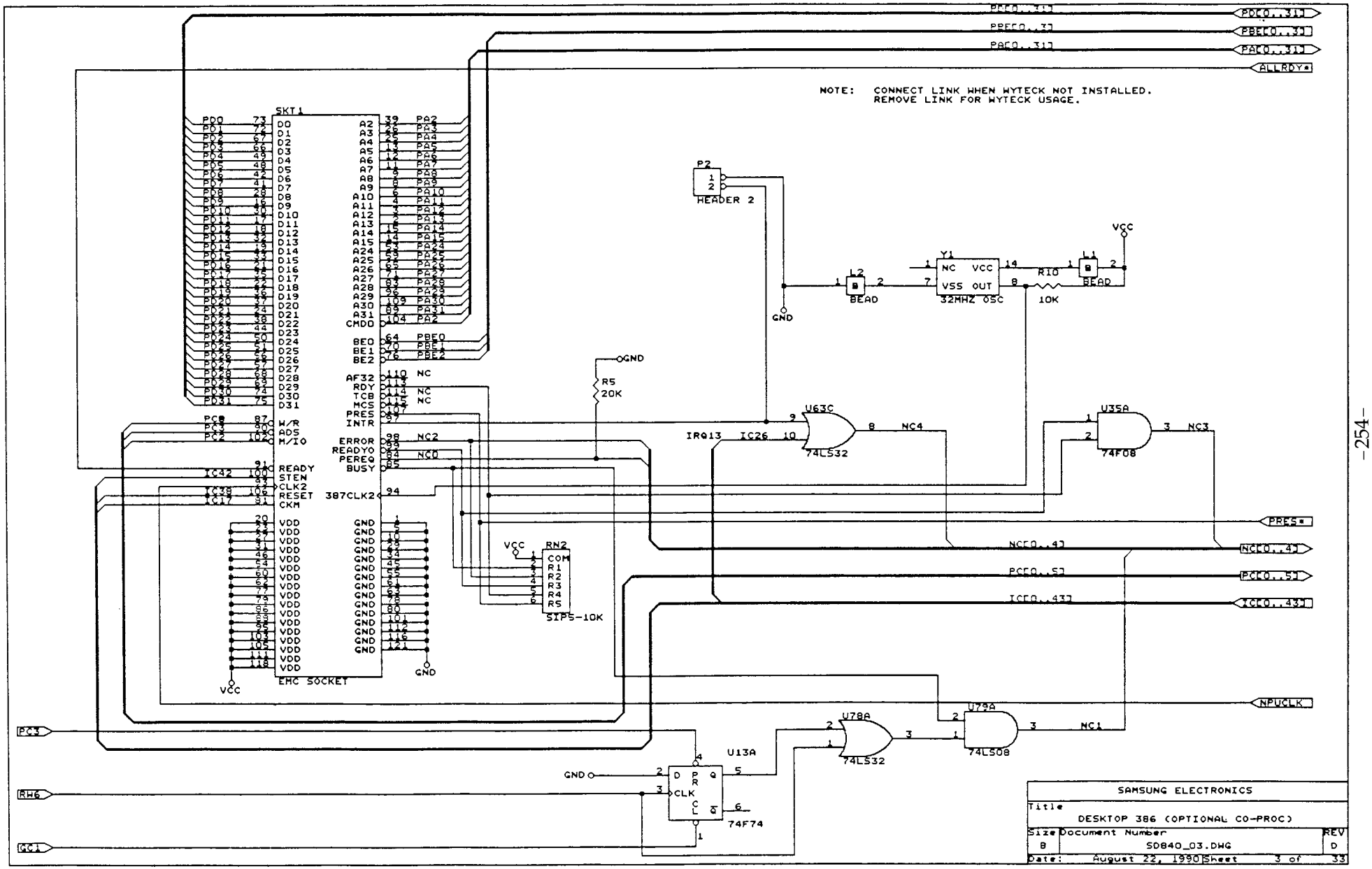
NOTE: CONNECT LINK WHEN WYTECK NOT INSTALLED.
REMOVE LINK FOR WYTECK USAGE.
SKT1
EMC SOCKET
P2
HEADER 2
L2
BEAD
Y1
32MHZ OSC
R10
10K
L1
BEAD
VCC
GND
R5
20K
U63C
74LS32
U35A
74F08
RN2
SIP5-10K
U78A
74LS32
U79A
74LS08
U13A
74F74
PRES*
NCE0..4]
PCE0..5]
ICE0..43]
NPUCLK
ALLRDY*
PC3
RH6
GC1
SAMSUNG ELECTRONICS
Title
DESKTOP 386 (OPTIONAL CO-PROC)
Size B
Document Number S0840_03.DWG
REV D
Date: August 22, 1990 Sheet 3 of 33

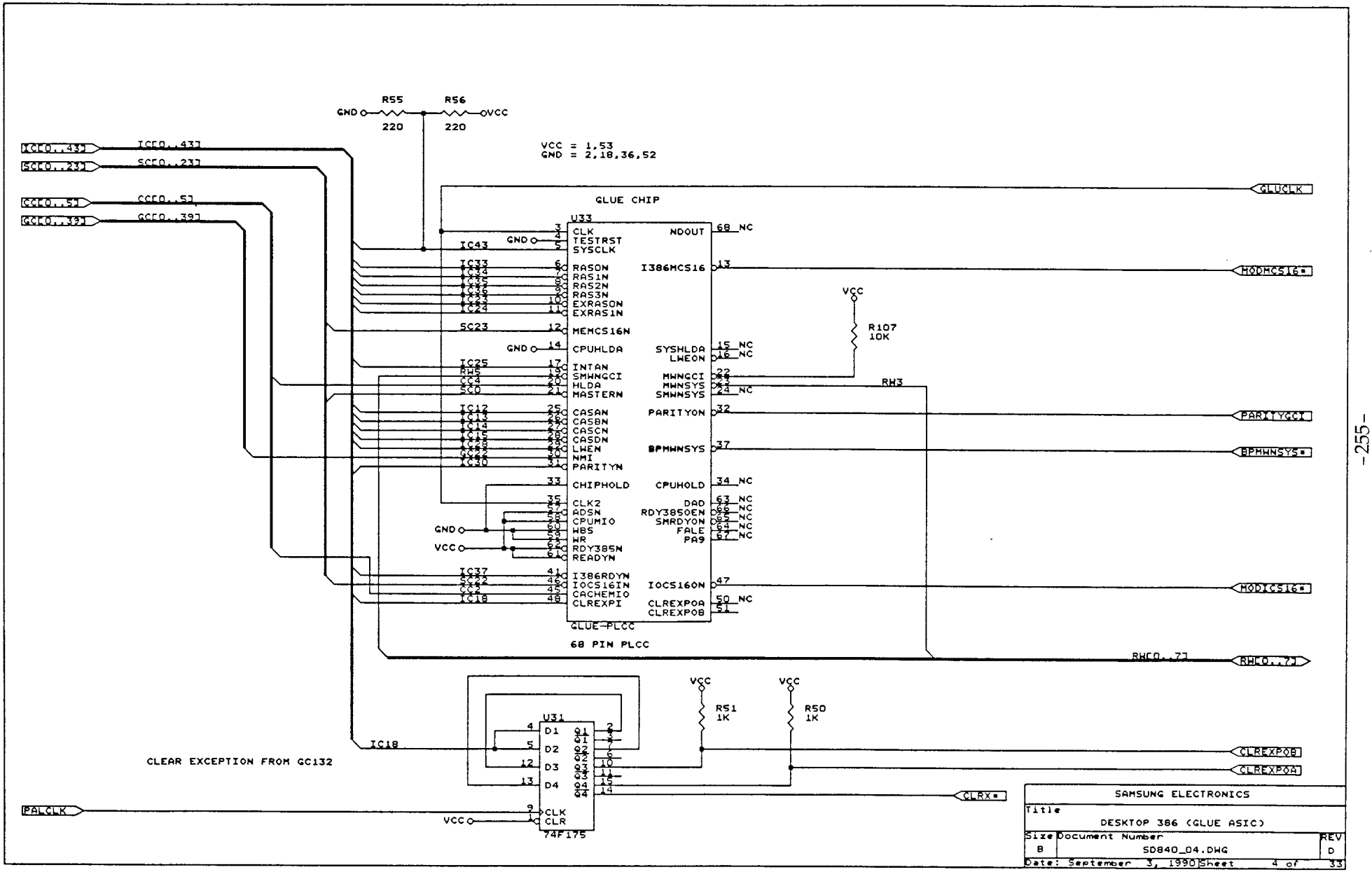

SAMSUNG ELECTRONICS

Title: DESKTOP 386 (GLUE ASIC)

Size: B | Document Number: SD840_04.DWG | REV: D

Date: September 3, 1990 | Sheet 4 of 33

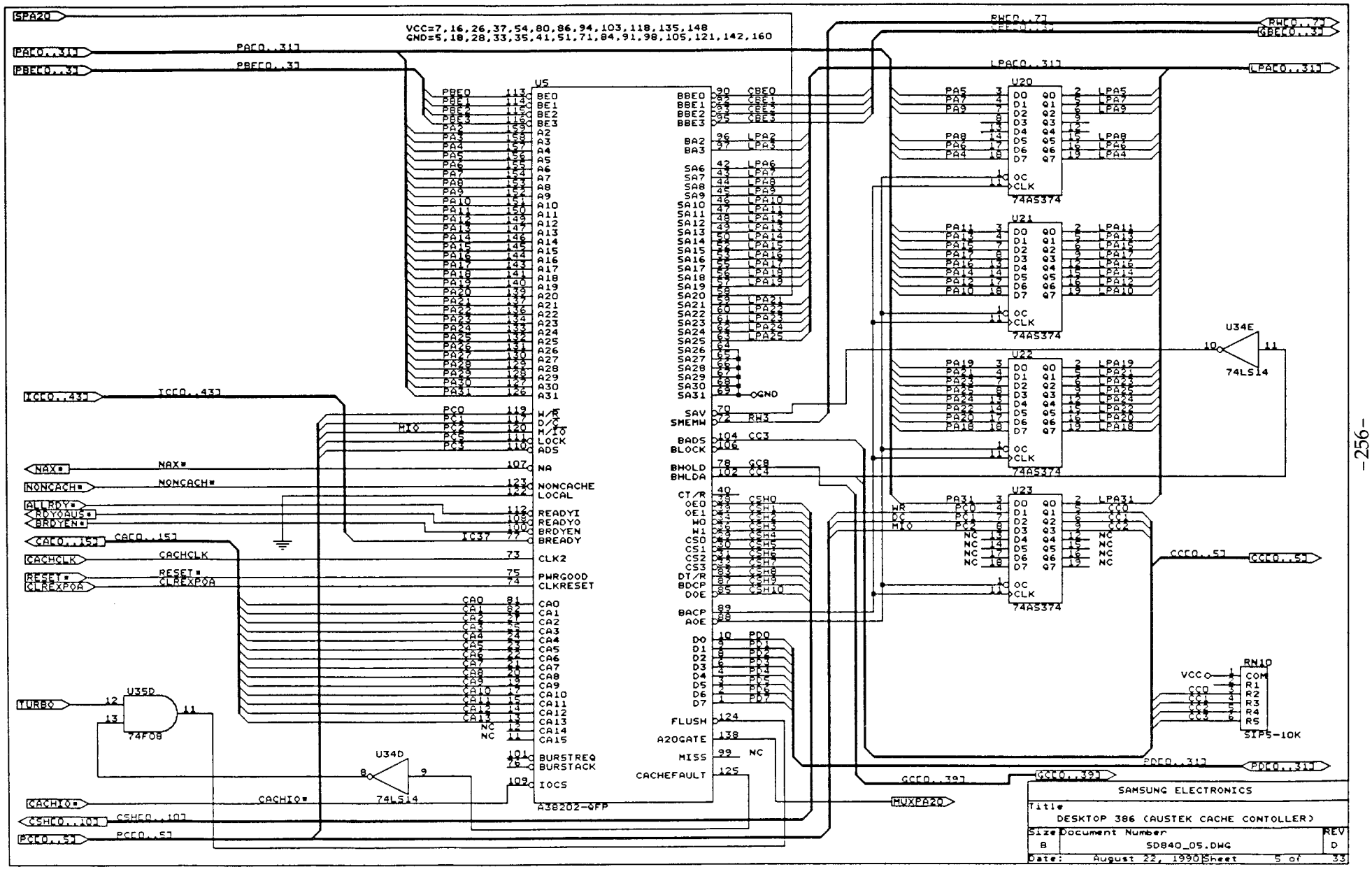
VCC=7,16,26,37,54,80,86,94,103,118,135,148
GND=5,18,28,33,35,41,51,71,84,91,98,105,121,142,160
U5
A38202-QFP
U20
U21
U22
U23
74AS374
U34E
74LS14
U35D
74F08
U34D
74LS14
RN10
SIP5-10K
SAMSUNG ELECTRONICS
Title
DESKTOP 386 (AUSTEK CACHE CONTOLLER)
Size B
Document Number
SD840_05.DWG
REV D
Date: August 22, 1990
Sheet 5 of 33

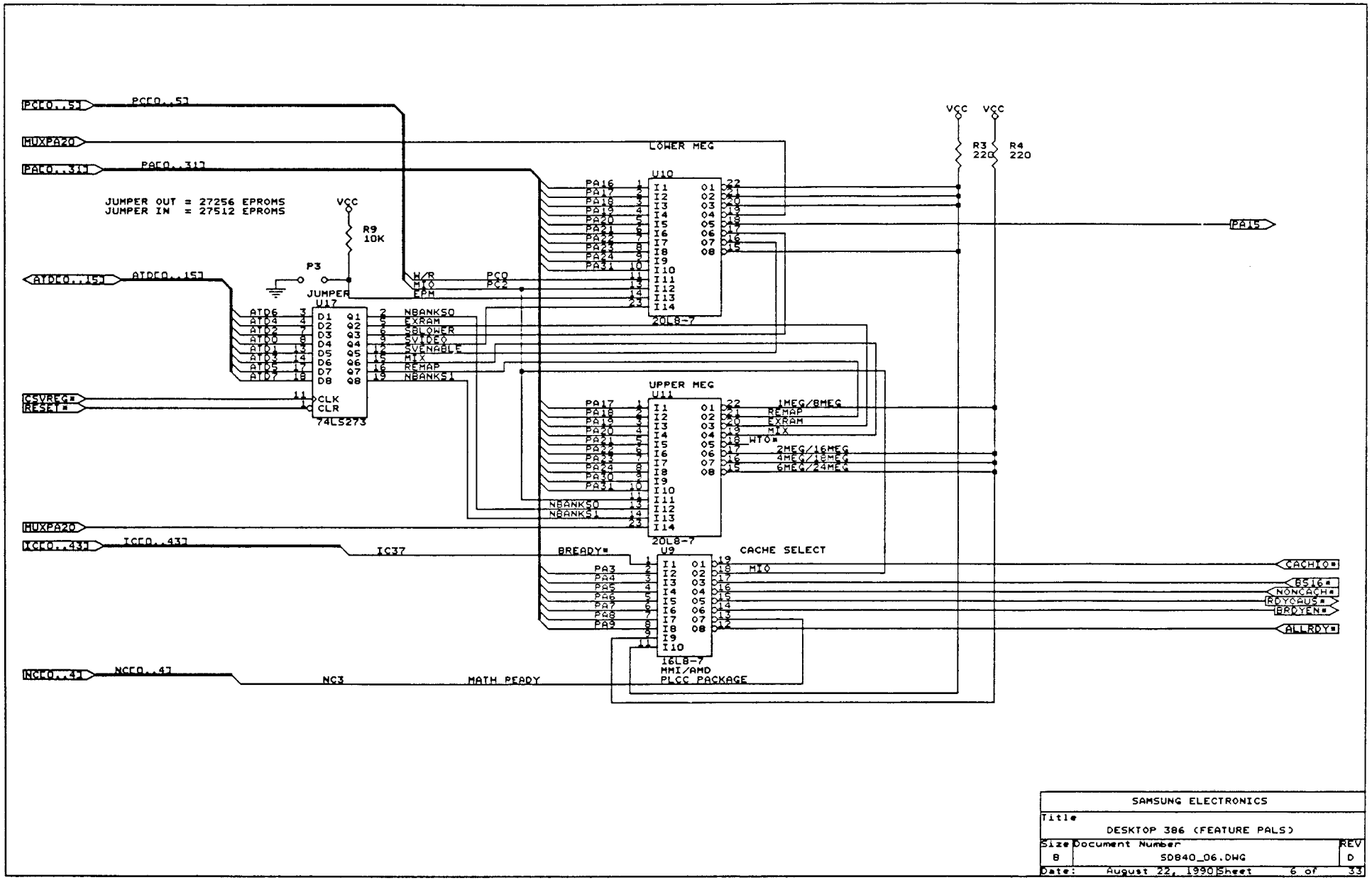

SAMSUNG ELECTRONICS		
Title: DESKTOP 386 (FEATURE PALS)		
Size: B	Document Number: SD840_06.DWG	REV: D
Date: August 22, 1990	Sheet 6 of 33	

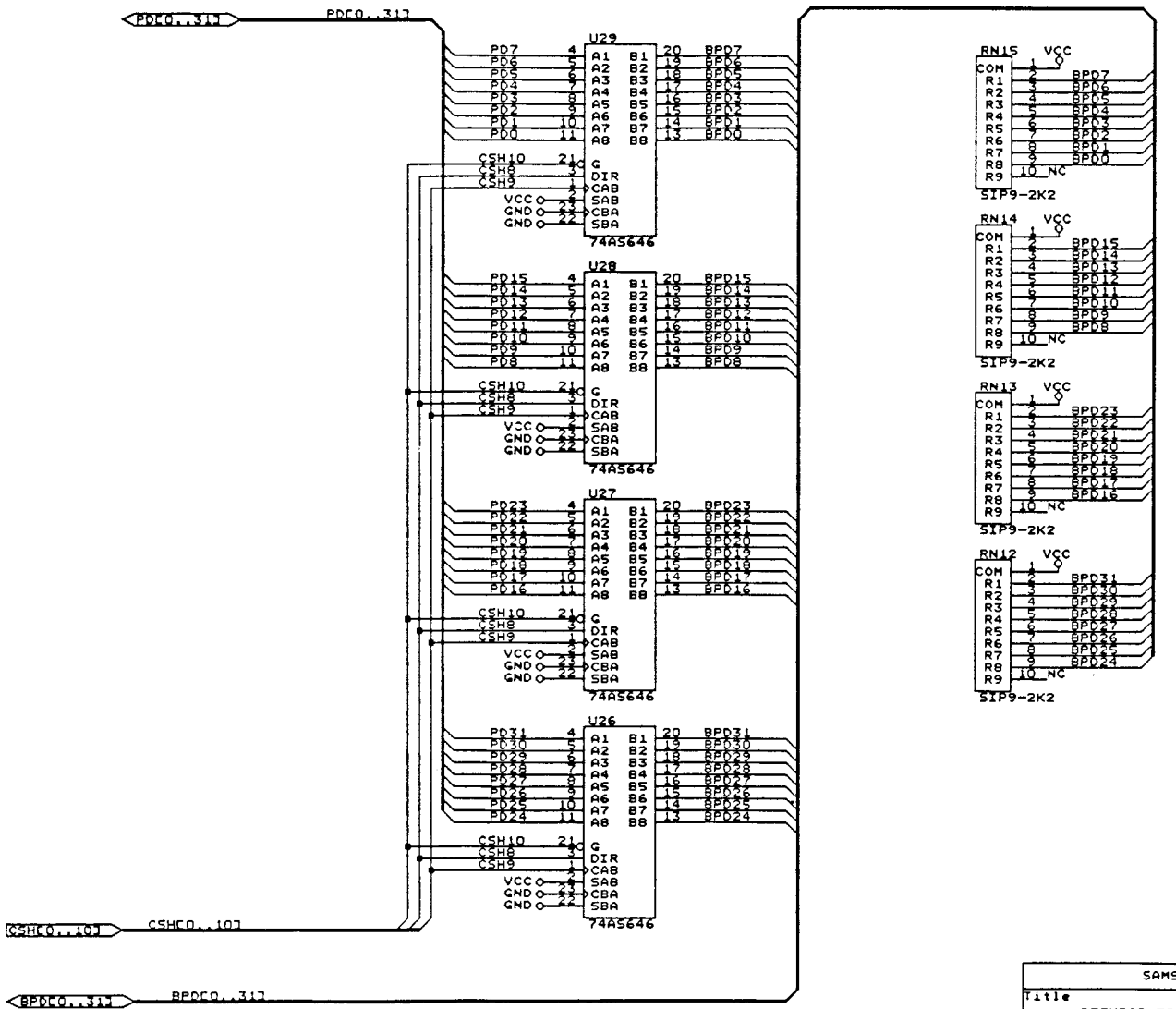

SAMSUNG ELECTRONICS		
Title: DESKTOP 386 (CACHE DATA BUFFERS)		
Size: B	Document Number: SD840_07.DWG	REV: D
Date: August 22, 1990	Sheet 7 of 33	

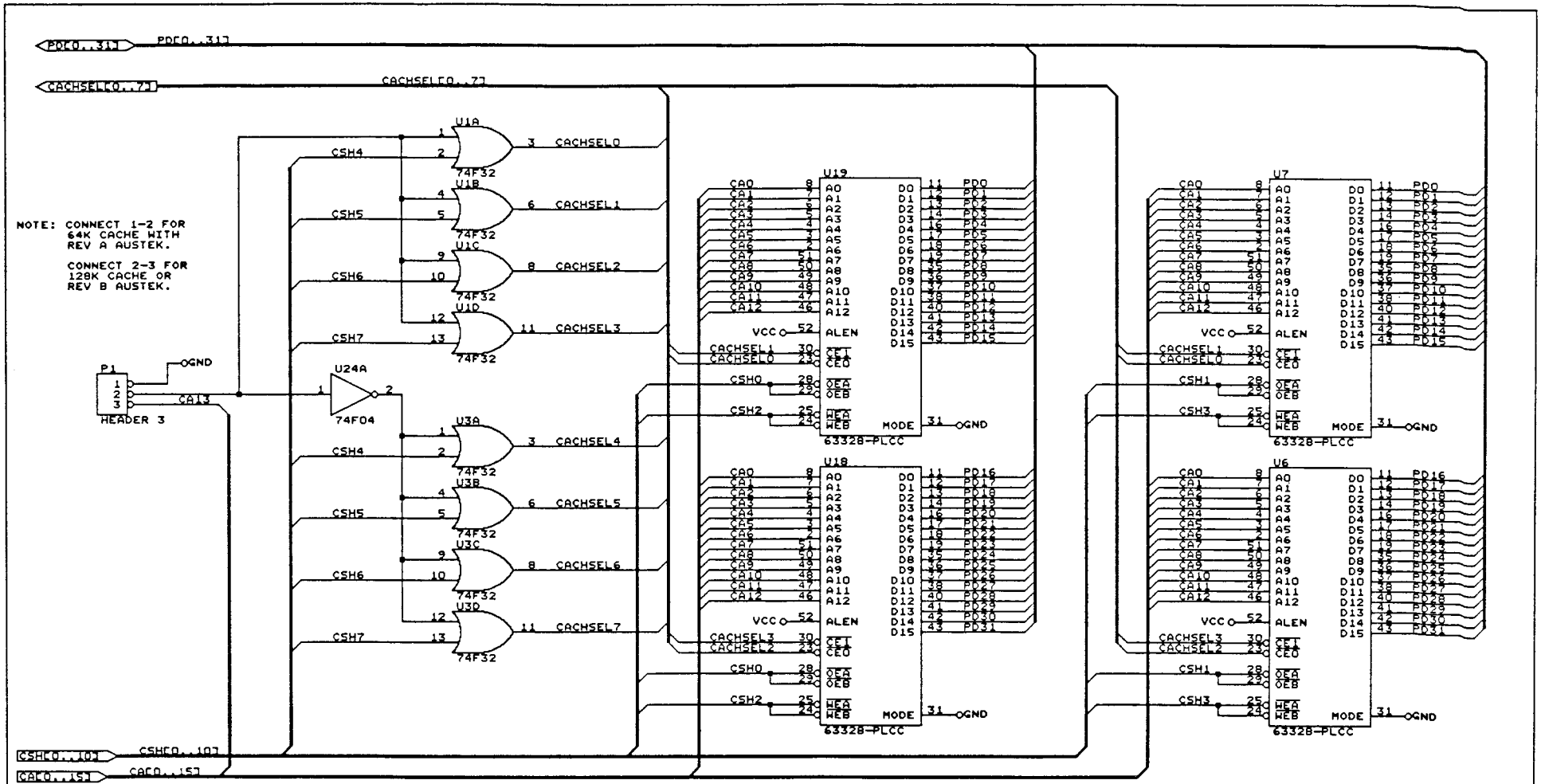

NOTE: THESE RAMS ARE SURFACE MOUNTED TO THE BOARD

SAMSUNG ELETRONICS		
Title DESKTOP 386 (64K CACHE RAM)		
Size B	Document Number SD840_08.DWG	REV D
Date: August 22, 1990	Sheet 8 of 33	

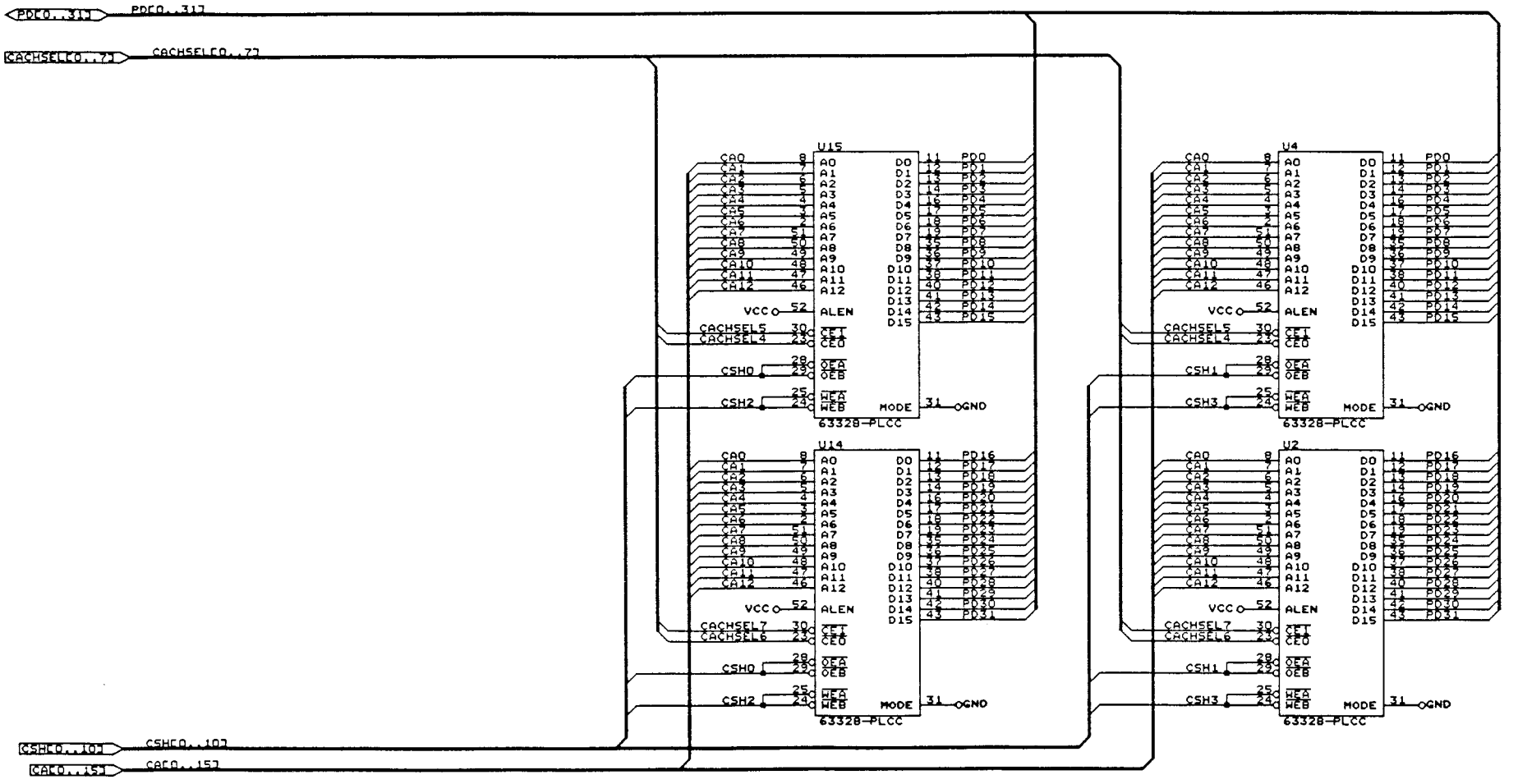

NOTE: THESE RAMS ARE SOCKETED ONTO THE BOARD

SAMSUNG ELECTRONICS		
Titl DESKTOP 386 (OPTIONAL 64K-128K CACHE RAM)		
Size B	Document Number SD840_09.DWG	REV D
Date: August 22, 1990	Sheet 9 of 33	

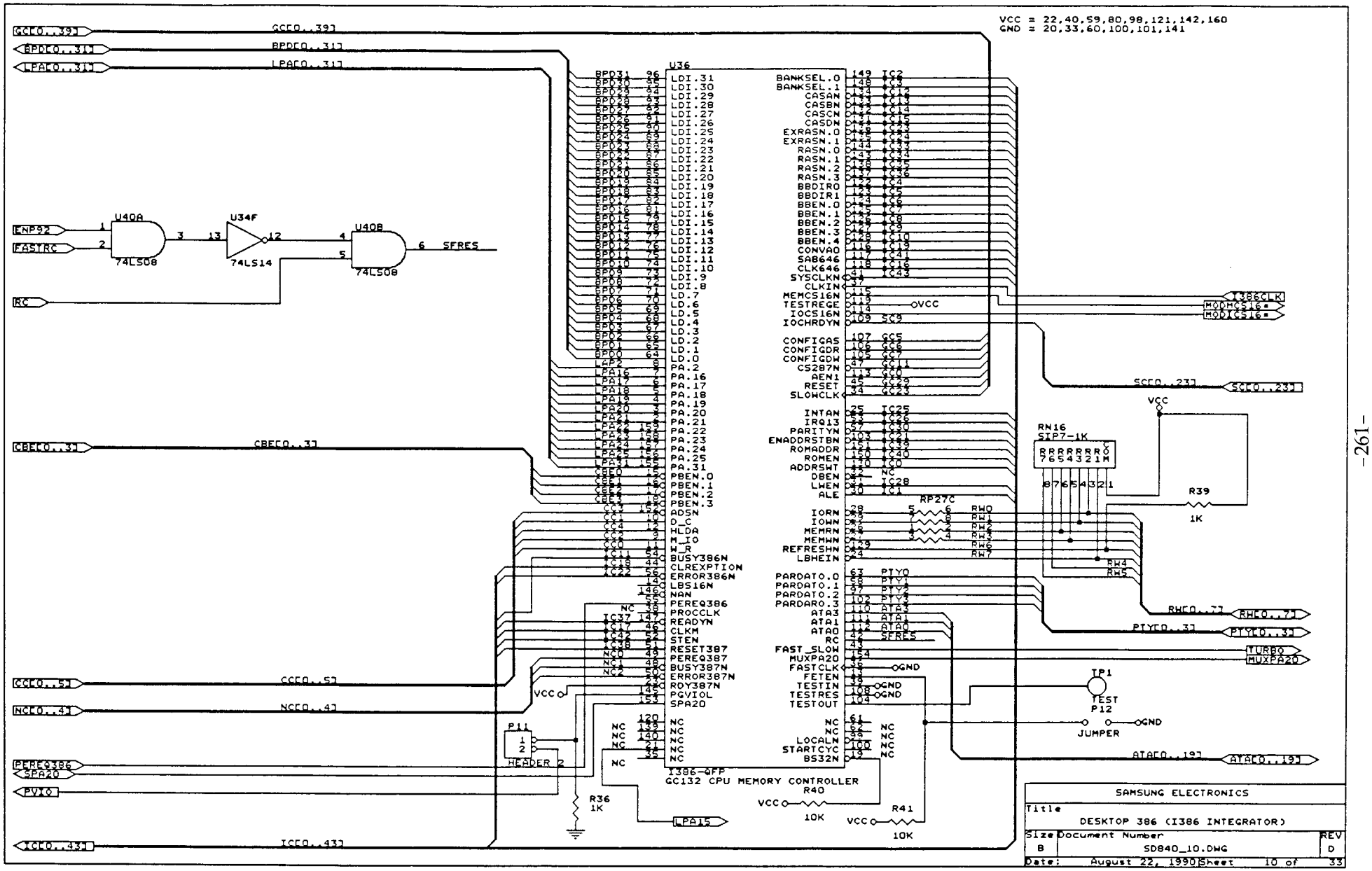
VCC = 22,40,59,80,98,121,142,160
GND = 20,33,60,100,101,141
U36
I386-QFP
GC132 CPU MEMORY CONTROLLER
U40A
74LS08
U34F
74LS14
U40B
74LS08
ENP92
FASTRC
RC
SFRES
GCFO..39]
BPDFO..31]
LPAFO..31]
CBEFO..3]
CCFO..5]
NCFO..4]
PEREQ386
SPA20
PVIO
ICFO..43]
I386CLK
MODMCS16*
MODICS16*
SCFO..23]
RN16
SIP7-1K
R39
1K
RP27C
RHFO..7]
PTYFO..3]
TURBO
MUXPA20
TP1
TEST
P12
JUMPER
GND
ATAFO..19]
P11
HEADER 2
R36
1K
LPA15
R40
10K
R41
10K
SAMSUNG ELECTRONICS
Title
DESKTOP 386 (I386 INTEGRATOR)
Size B
Document Number SD840_10.DWG
REV D
Date: August 22, 1990 Sheet 10 of 33

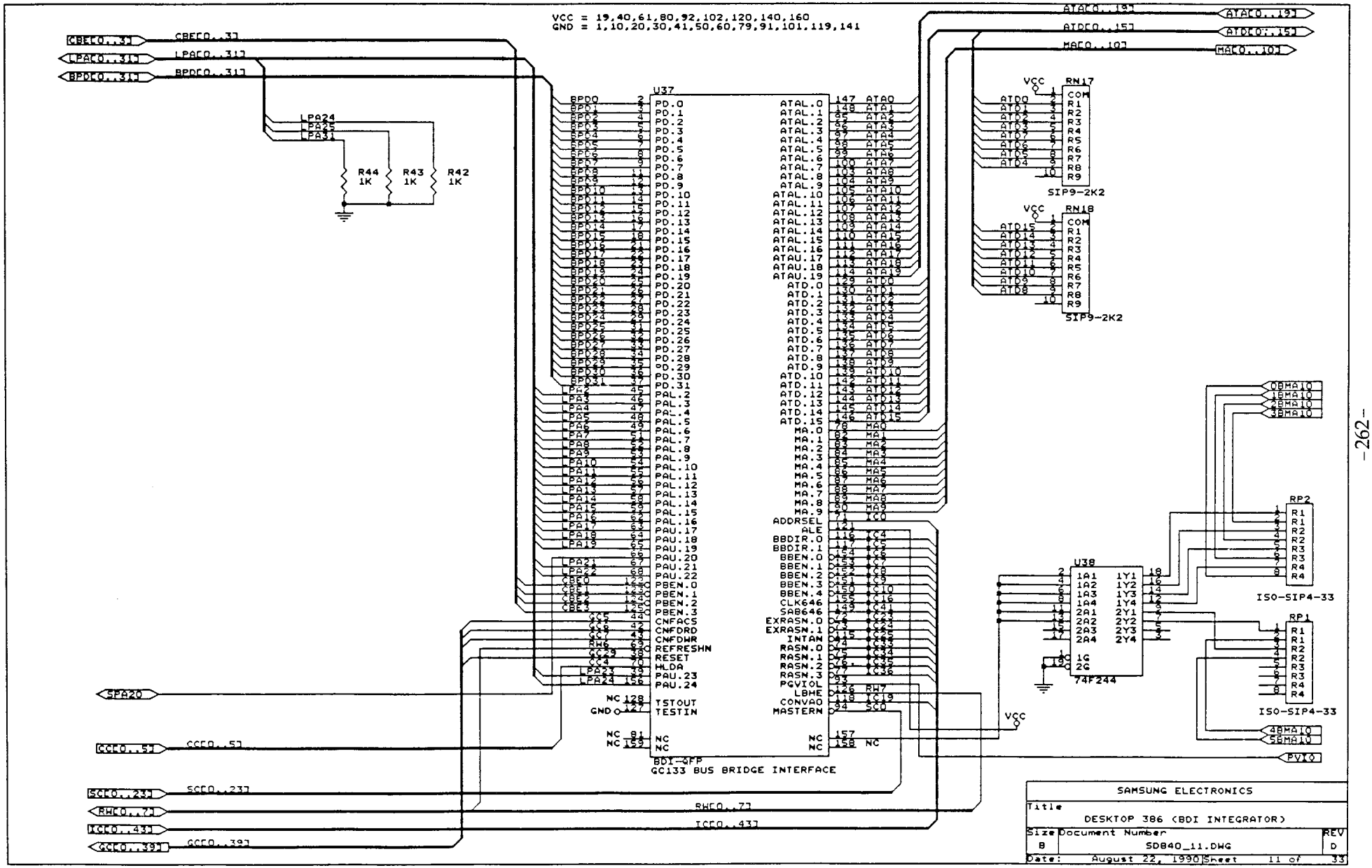
VCC = 19,40,61,80,92,102,120,140,160
GND = 1,10,20,30,41,50,60,79,91,101,119,141
U37
BDI-QFP
GC133 BUS BRIDGE INTERFACE
RN17
SIP9-2K2
RN18
SIP9-2K2
U38
74F244
RP2
ISO-SIP4-33
RP1
ISO-SIP4-33
R44 1K
R43 1K
R42 1K
SAMSUNG ELECTRONICS
Title
DESKTOP 386 (BDI INTEGRATOR)
Size B
Document Number SD840_11.DWG
REV D
Date: August 22, 1990
Sheet 11 of 33

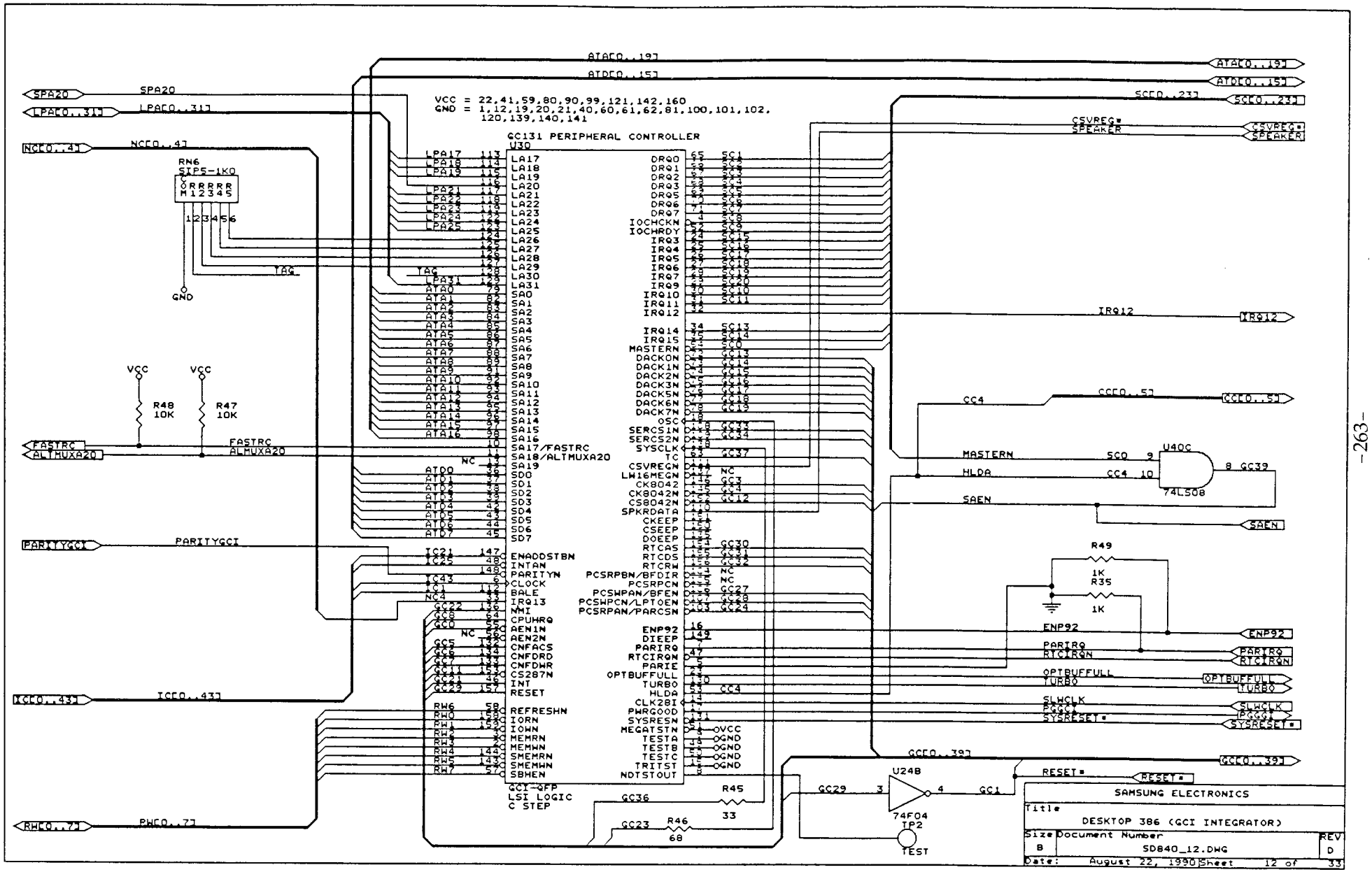
VCC = 22,41,59,80,90,99,121,142,160
GND = 1,12,19,20,21,40,60,61,62,81,100,101,102,
120,139,140,141
GC131 PERIPHERAL CONTROLLER
U30
GCI-QFP
LSI LOGIC
C STEP
RN6
SIP5-1K0
R48
10K
R47
10K
R49
1K
R35
1K
R45
33
R46
68
U40C
74LS08
U24B
74F04
TP2
TEST
SAMSUNG ELECTRONICS
Title
DESKTOP 386 (GCI INTEGRATOR)
Size
B
Document Number
SD840_12.DWG
REV
D
Date: August 22, 1990
Sheet 12 of 33

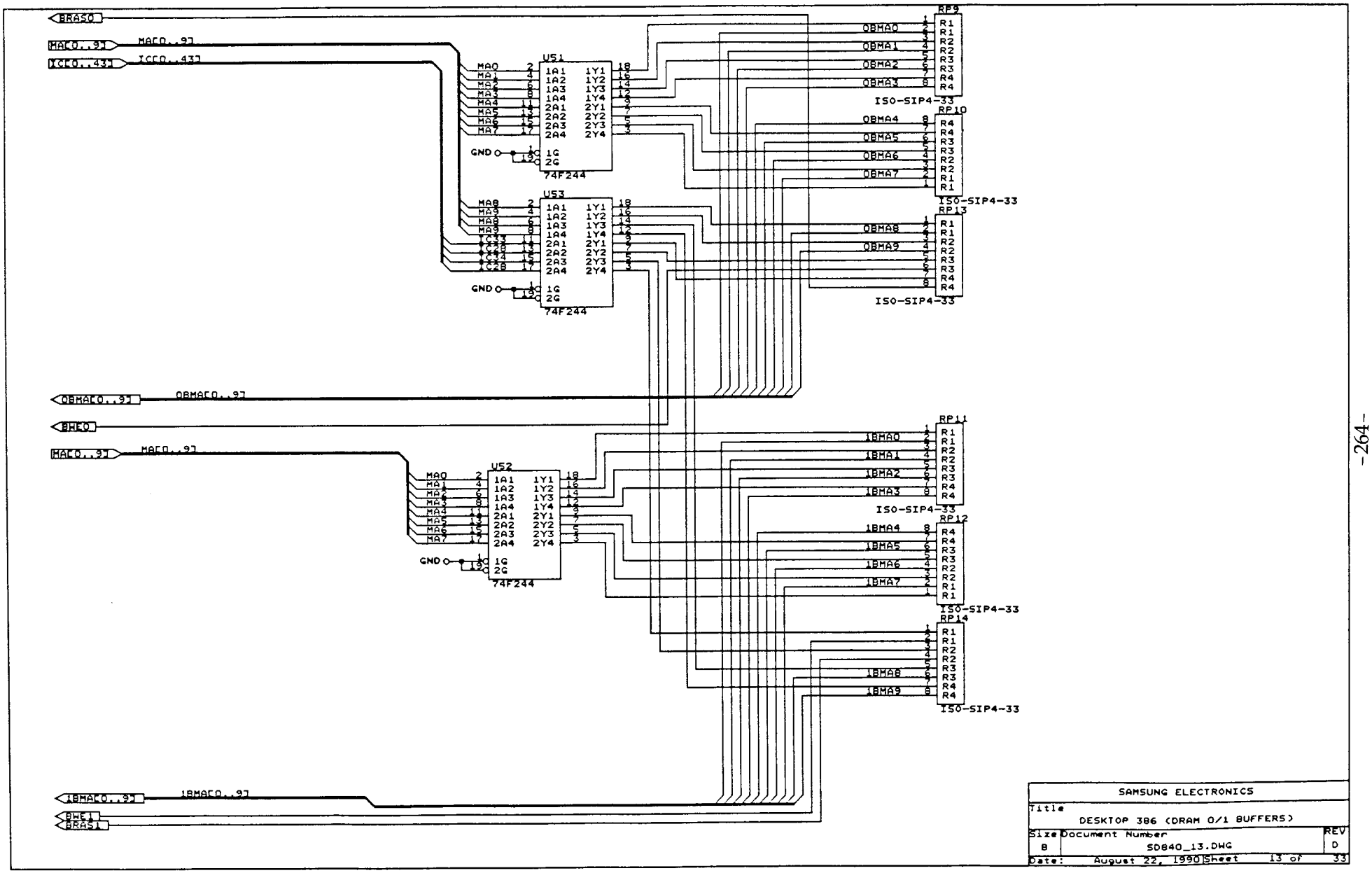

SAMSUNG ELECTRONICS		
Title DESKTOP 386 (DRAM 0/1 BUFFERS)		
Size B	Document Number SD840_13.DWG	REV D
Date: August 22, 1990	Sheet 13 of 33	

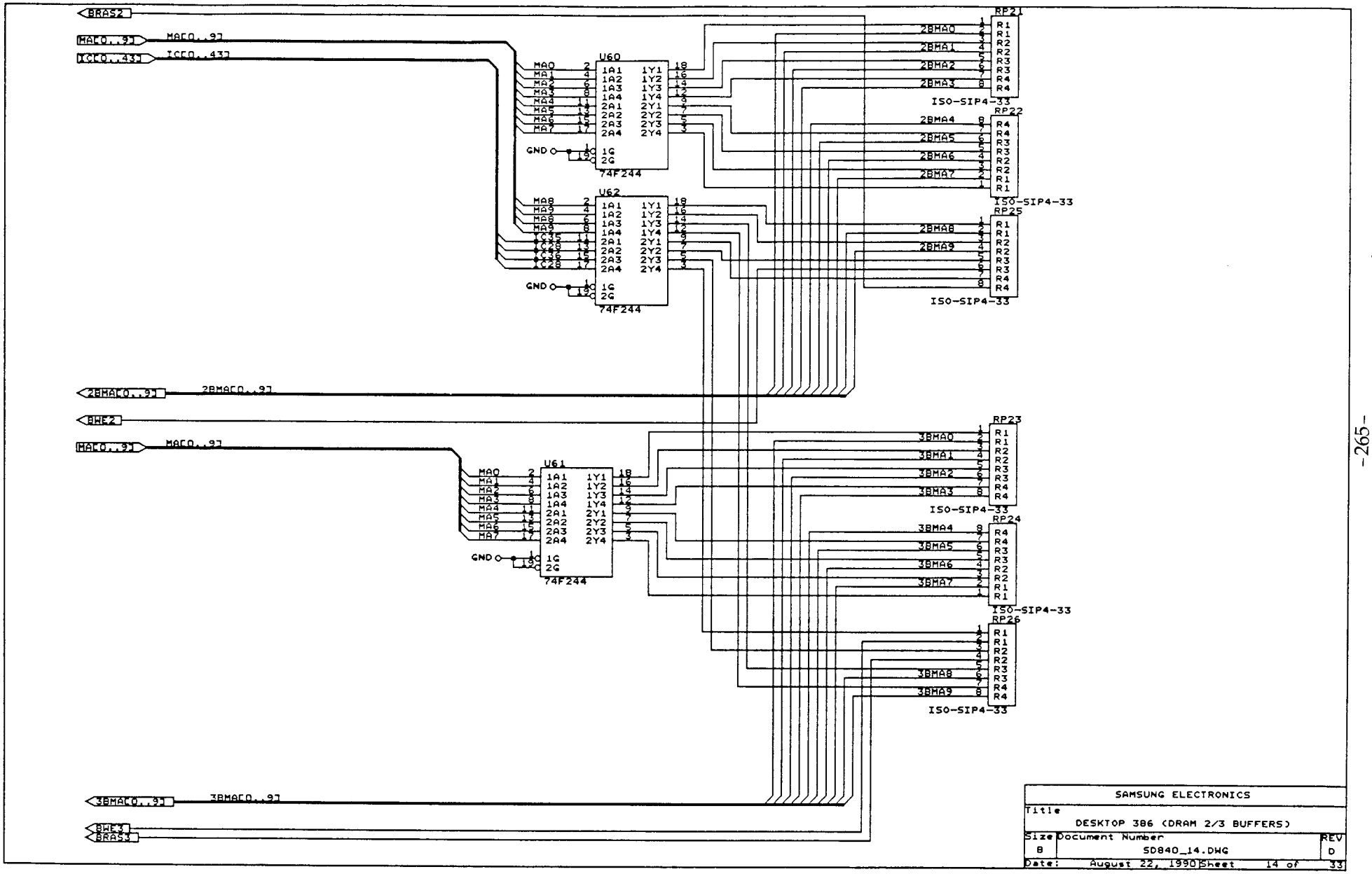
BRAS2
MACO..9]
MACO..9]
ICCO..43]
ICCO..43]
U60
74F244
U62
74F244
U61
74F244
GND
RP21
RP22
RP25
RP23
RP24
RP26
ISO-SIP4-33
2BMACO..9]
2BMACO..9]
BWE2
3BMACO..9]
3BMACO..9]
BWE3
BRAS3
SAMSUNG ELECTRONICS
Title
DESKTOP 386 (DRAM 2/3 BUFFERS)
Size B
Document Number
SD840_14.DWG
REV D
Date: August 22, 1990
Sheet 14 of 33

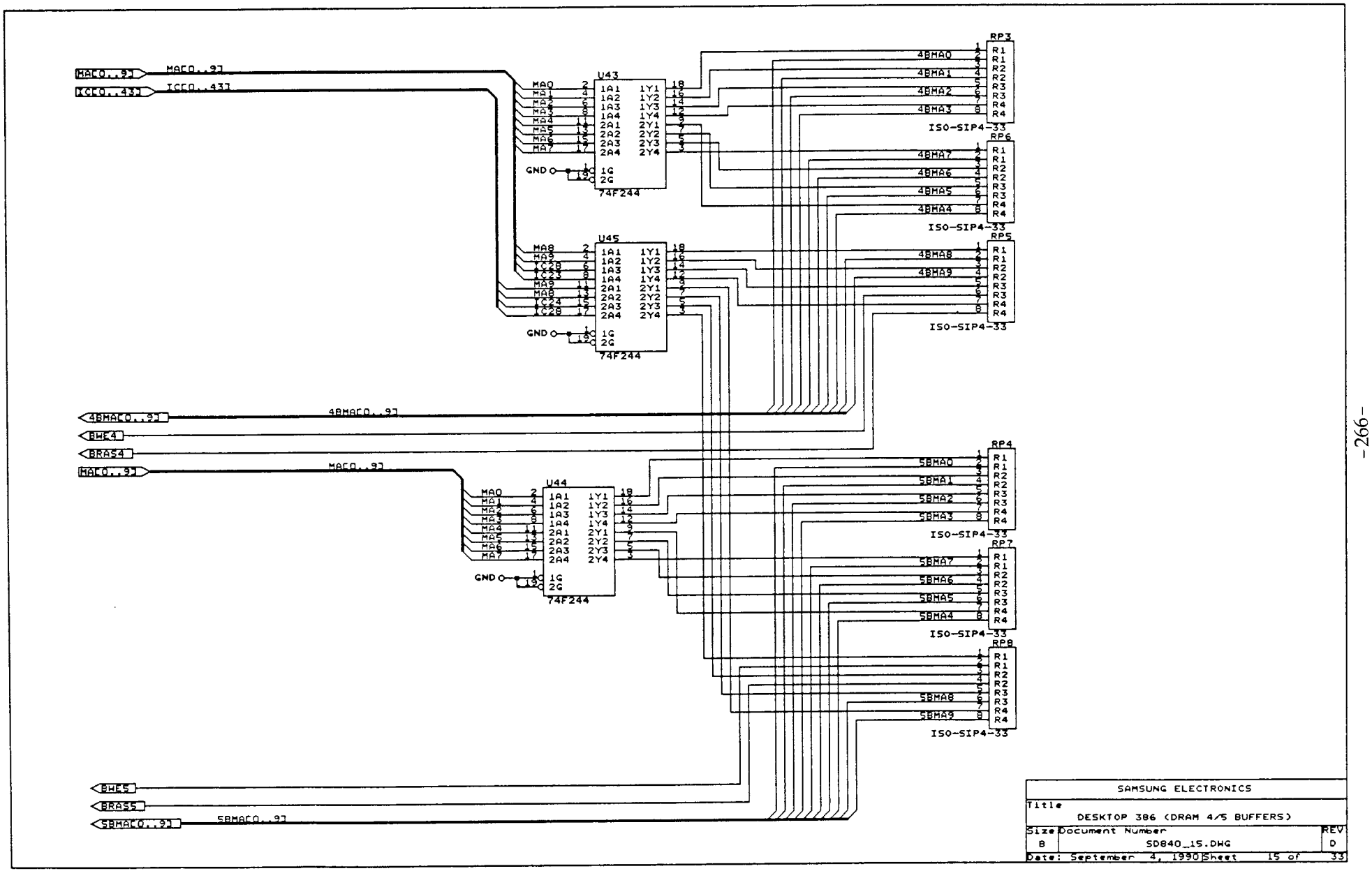
MAC0..9]
ICC0..43]
U43
74F244
U45
74F244
U44
74F244
GND
4BMAC0..9]
BWE4
BRAS4
5BMAC0..9]
BWE5
BRAS5
RP3
RP6
RP5
RP4
RP7
RP8
ISO-SIP4-33
SAMSUNG ELECTRONICS
Title
DESKTOP 386 (DRAM 4/5 BUFFERS)
Size B
Document Number SD840_15.DWG
REV D
Date: September 4, 1990 Sheet 15 of 33

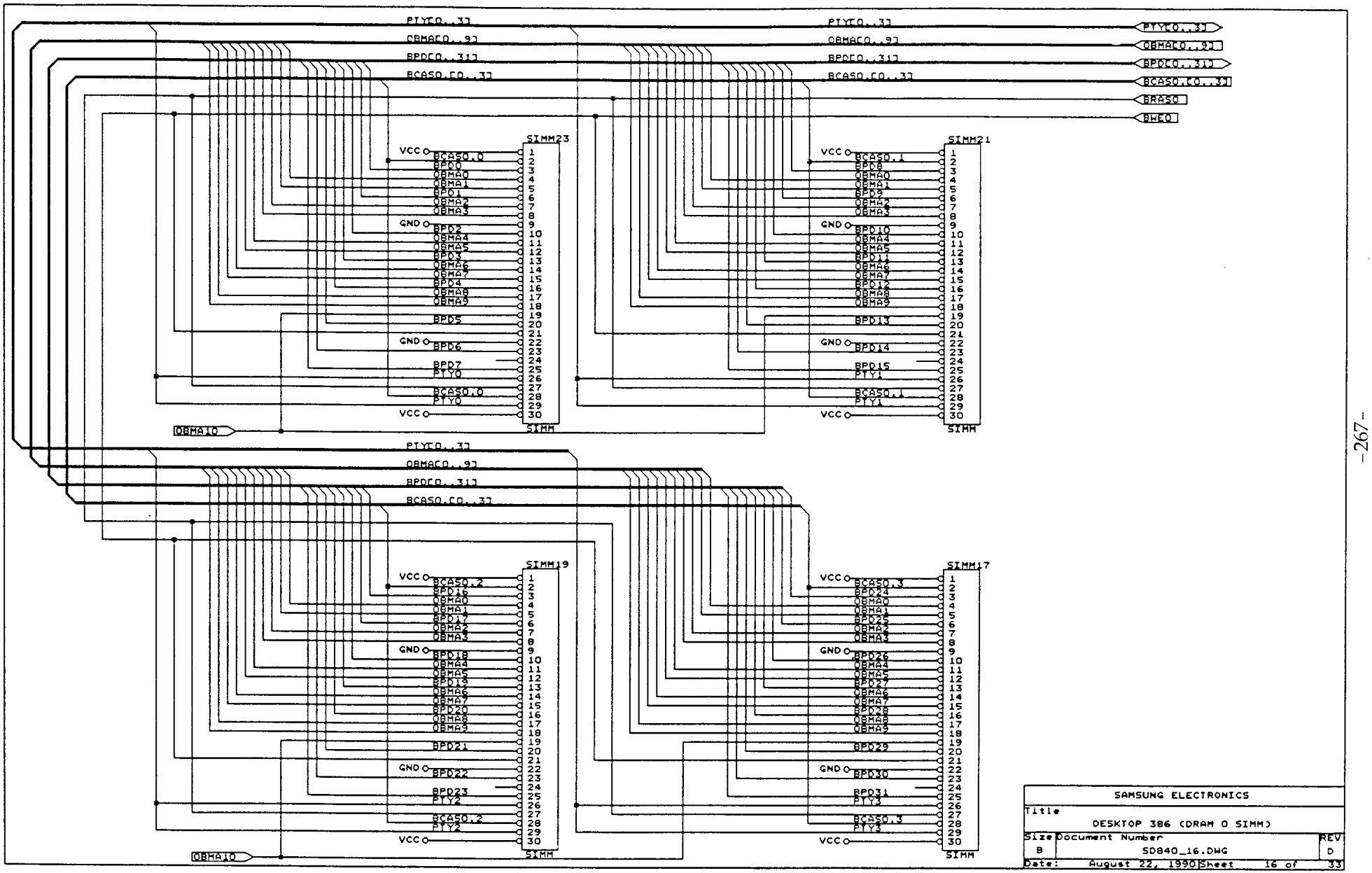
PTY[0..3]
OBMA[0..9]
BPD[0..31]
BCAS0.[0..3]
BRAS0
BWE0
SIMM23
SIMM21
SIMM19
SIMM17
VCC
GND
BCAS0.0
BPD0
OBMA0
OBMA1
BPD1
OBMA2
OBMA3
BPD2
OBMA4
OBMA5
BPD3
OBMA6
OBMA7
BPD4
OBMA8
OBMA9
BPD5
BPD6
BPD7
PTY0
BCAS0.1
BPD8
BPD9
BPD10
BPD11
BPD12
BPD13
BPD14
BPD15
PTY1
BCAS0.2
BPD16
BPD17
BPD18
BPD19
BPD20
BPD21
BPD22
BPD23
PTY2
BCAS0.3
BPD24
BPD25
BPD26
BPD27
BPD28
BPD29
BPD30
BPD31
PTY3
SIMM
OBMA10
SAMSUNG ELECTRONICS
Title
DESKTOP 386 (DRAM 0 SIMM)
Size B
Document Number
SD840_16.DWG
REV D
Date: August 22, 1990
Sheet 16 of 33

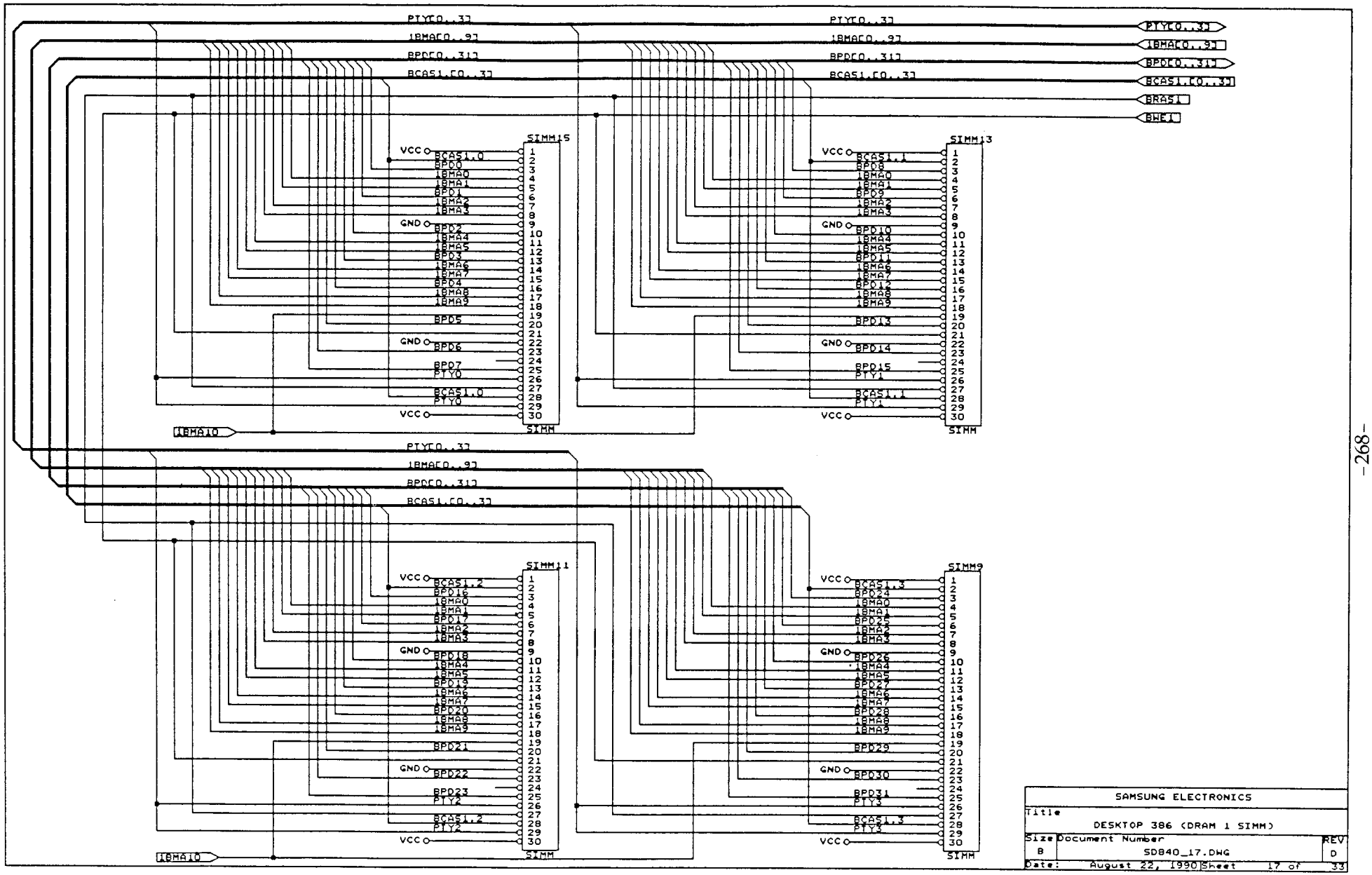
PTYC[0..3]
18MAC[0..9]
BPDC[0..31]
BCAS1.C[0..3]
BRAS1
BWE1
SIMM15
SIMM13
SIMM11
SIMM9
SIMM
VCC
GND
BCAS1.0
BPD0
18MA0
18MA1
BPD1
18MA2
18MA3
BPD2
18MA4
18MA5
BPD3
18MA6
18MA7
BPD4
18MA8
18MA9
BPD5
BPD6
BPD7
PTY0
BCAS1.1
BPD8
BPD9
BPD10
BPD11
BPD12
BPD13
BPD14
BPD15
PTY1
BCAS1.2
BPD16
BPD17
BPD18
BPD19
BPD20
BPD21
BPD22
BPD23
PTY2
BCAS1.3
BPD24
BPD25
BPD26
BPD27
BPD28
BPD29
BPD30
BPD31
PTY3
18MA10
SAMSUNG ELECTRONICS
Title
DESKTOP 386 (DRAM 1 SIMM)
Size B
Document Number
SD840_17.DWG
REV D
Date: August 22, 1990
Sheet 17 of 33

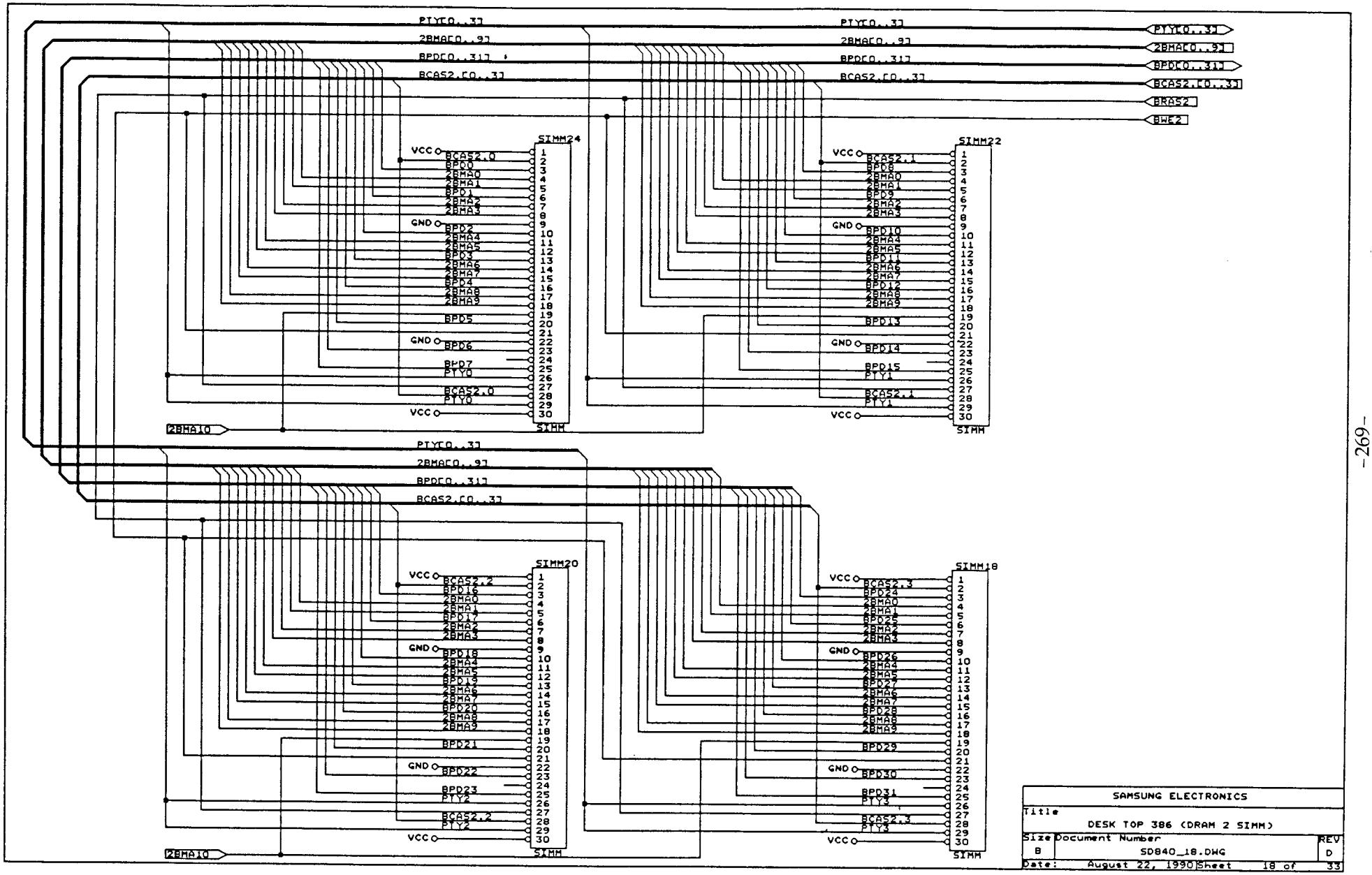
PTY[0..3]
28MA[0..9]
BPD[0..31]
BCAS2.[0..3]
BRAS2
BWE2
SIMM24
SIMM22
SIMM20
SIMM18
VCC
GND
BCAS2.0
BPD0
28MA0
28MA1
BPD1
28MA2
28MA3
BPD2
28MA4
28MA5
BPD3
28MA6
28MA7
BPD4
28MA8
28MA9
BPD5
BPD6
BPD7
PTY0
BCAS2.0
PTY0
BCAS2.1
BPD8
BPD9
BPD10
BPD11
BPD12
BPD13
BPD14
BPD15
PTY1
BCAS2.1
PTY1
BCAS2.2
BPD16
BPD17
BPD18
BPD19
BPD20
BPD21
BPD22
BPD23
PTY2
BCAS2.2
PTY2
BCAS2.3
BPD24
BPD25
BPD26
BPD27
BPD28
BPD29
BPD30
BPD31
PTY3
BCAS2.3
PTY3
SIMM
SAMSUNG ELECTRONICS
Title
DESK TOP 386 (DRAM 2 SIMM)
Size B
Document Number
SD840_18.DWG
REV D
Date: August 22, 1990
Sheet 18 of 33

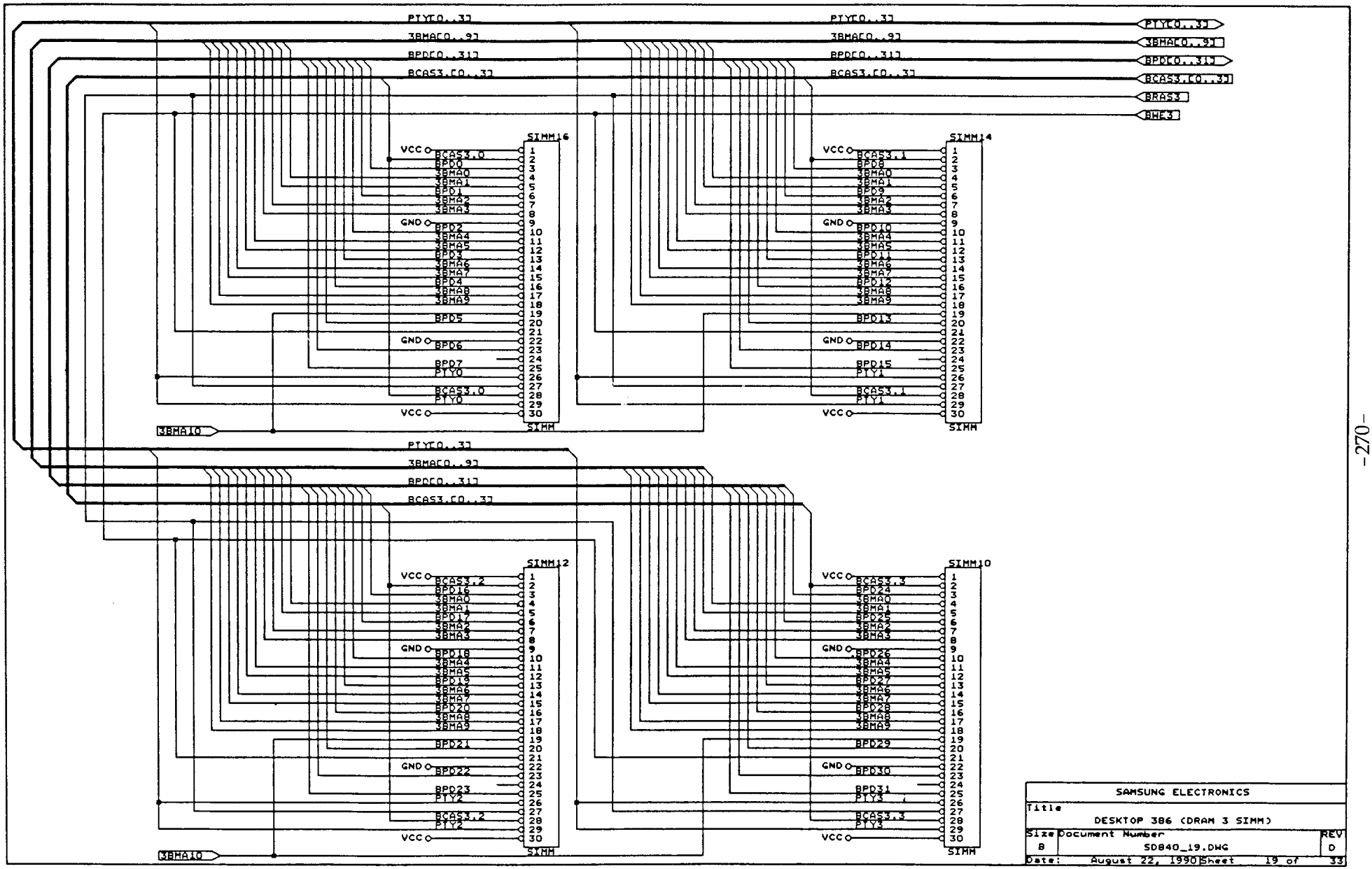

SAMSUNG ELECTRONICS		
Title DESKTOP 386 (DRAM 3 SIMM)		
Size B	Document Number SD840_19.DWG	REV D
Date: August 22, 1990	Sheet 19 of 33	

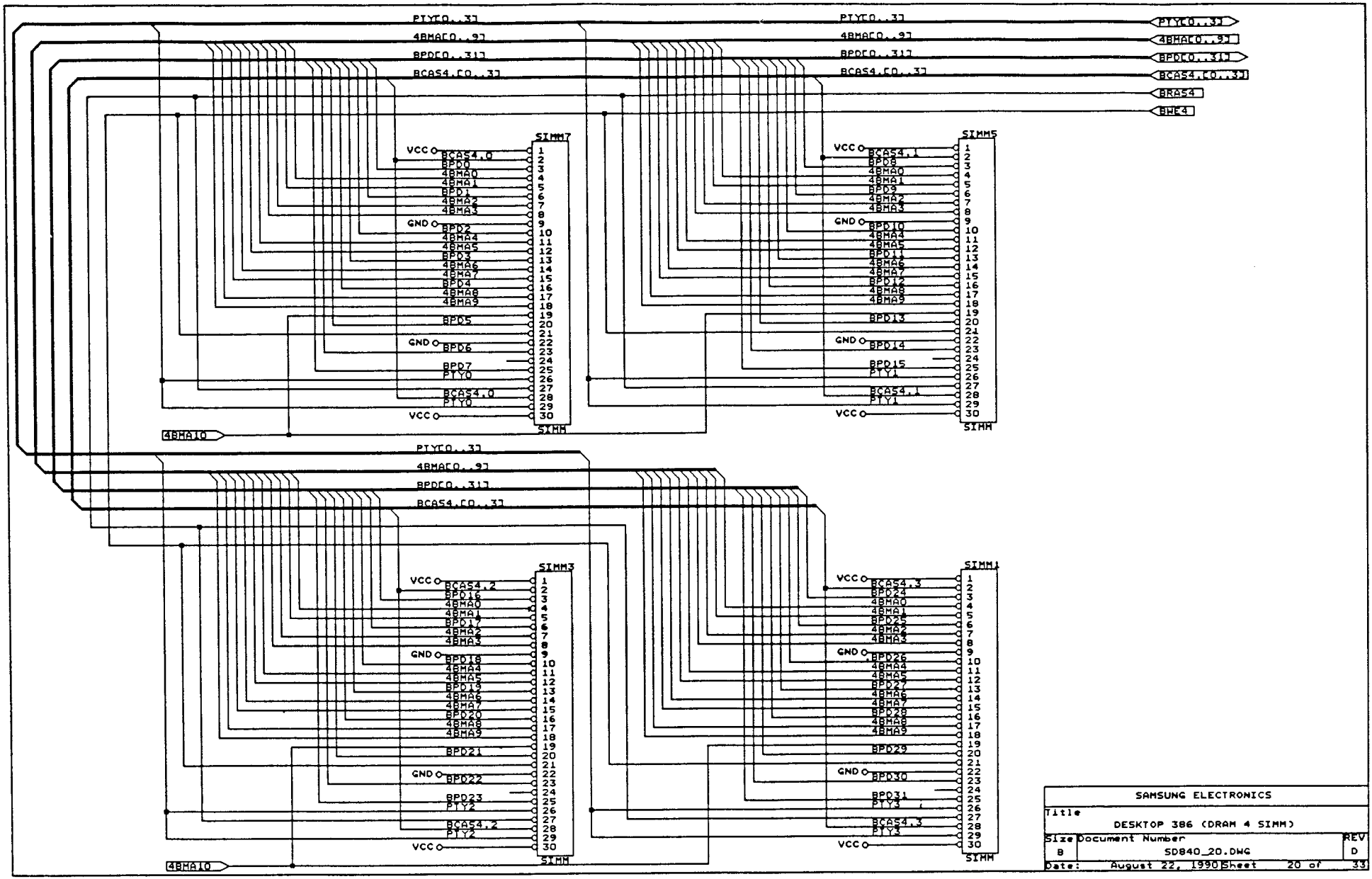

SAMSUNG ELECTRONICS		
Title: DESKTOP 386 (DRAM 4 SIMM)		
Size: B	Document Number: SD840_20.DWG	REV: D
Date: August 22, 1990	Sheet 20 of 33	

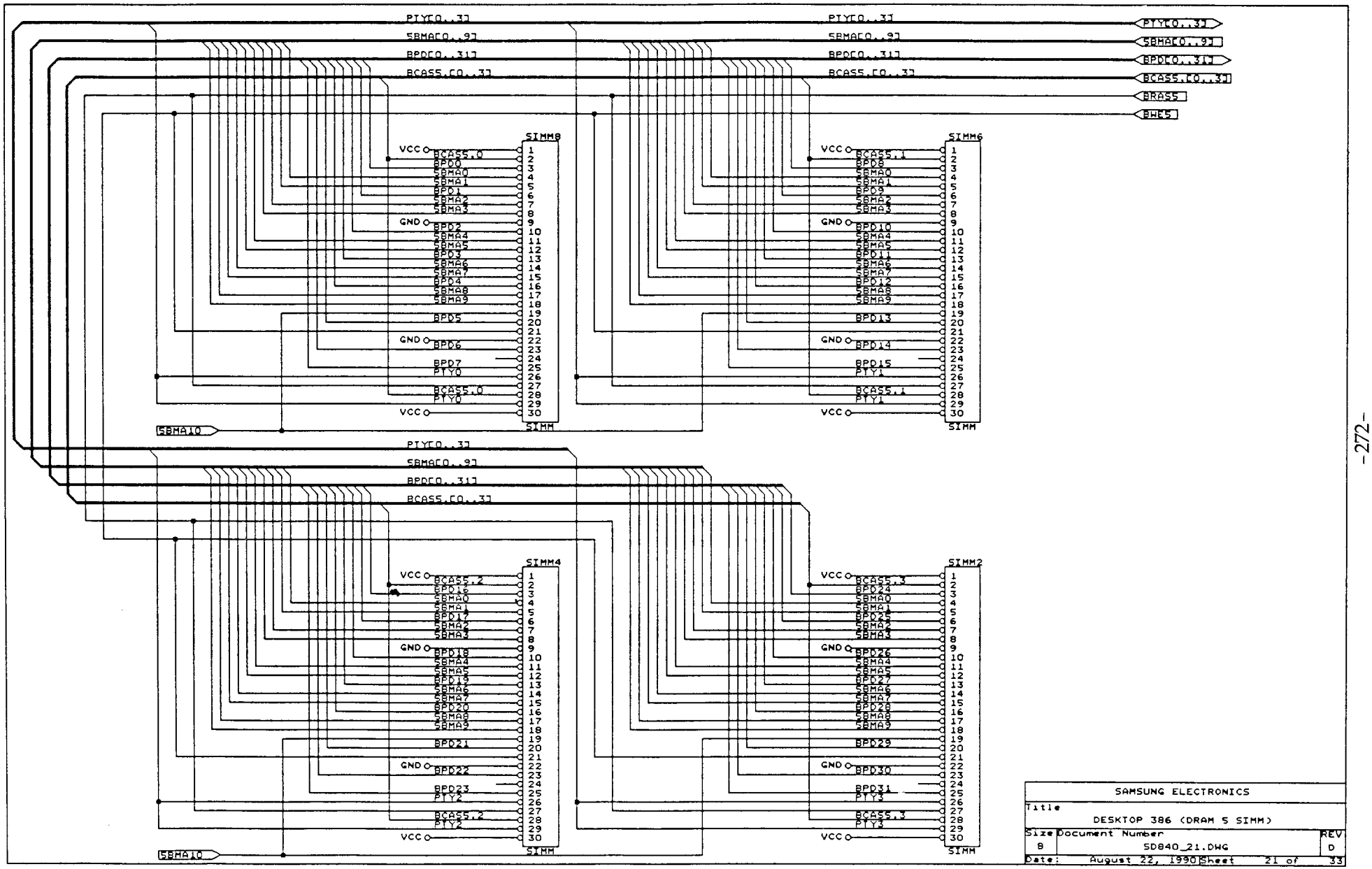

SAMSUNG ELECTRONICS		
Title: DESKTOP 386 (DRAM 5 SIMM)		
Size: B	Document Number: SD840_21.DWG	REV: D
Date: August 22, 1990	Sheet 21 of 33	

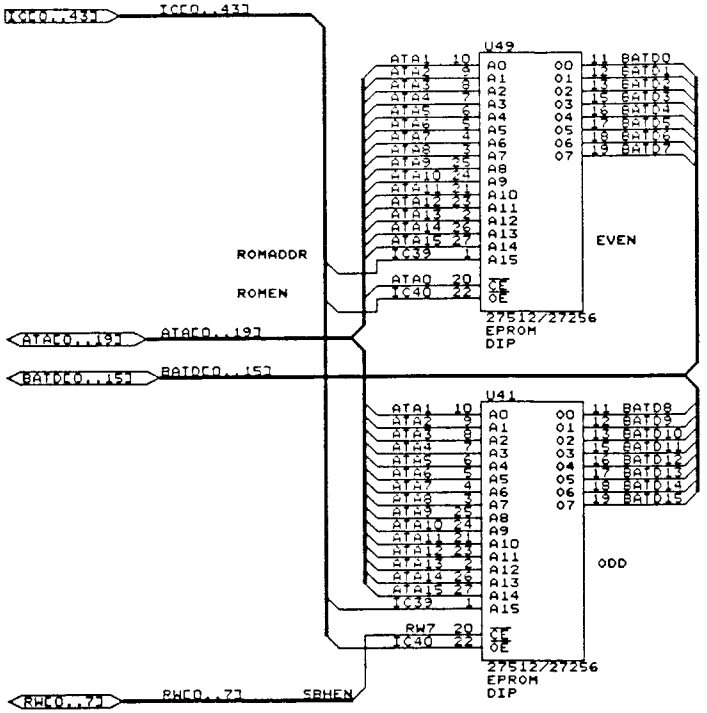

SAMSUNG ELECTRONICS		
Title	DESKTOP 386 (EPROM)	
Size B	Document Number SD840_22.DWG	REV D
Date: August 22, 1990	Sheet 22 of 33	

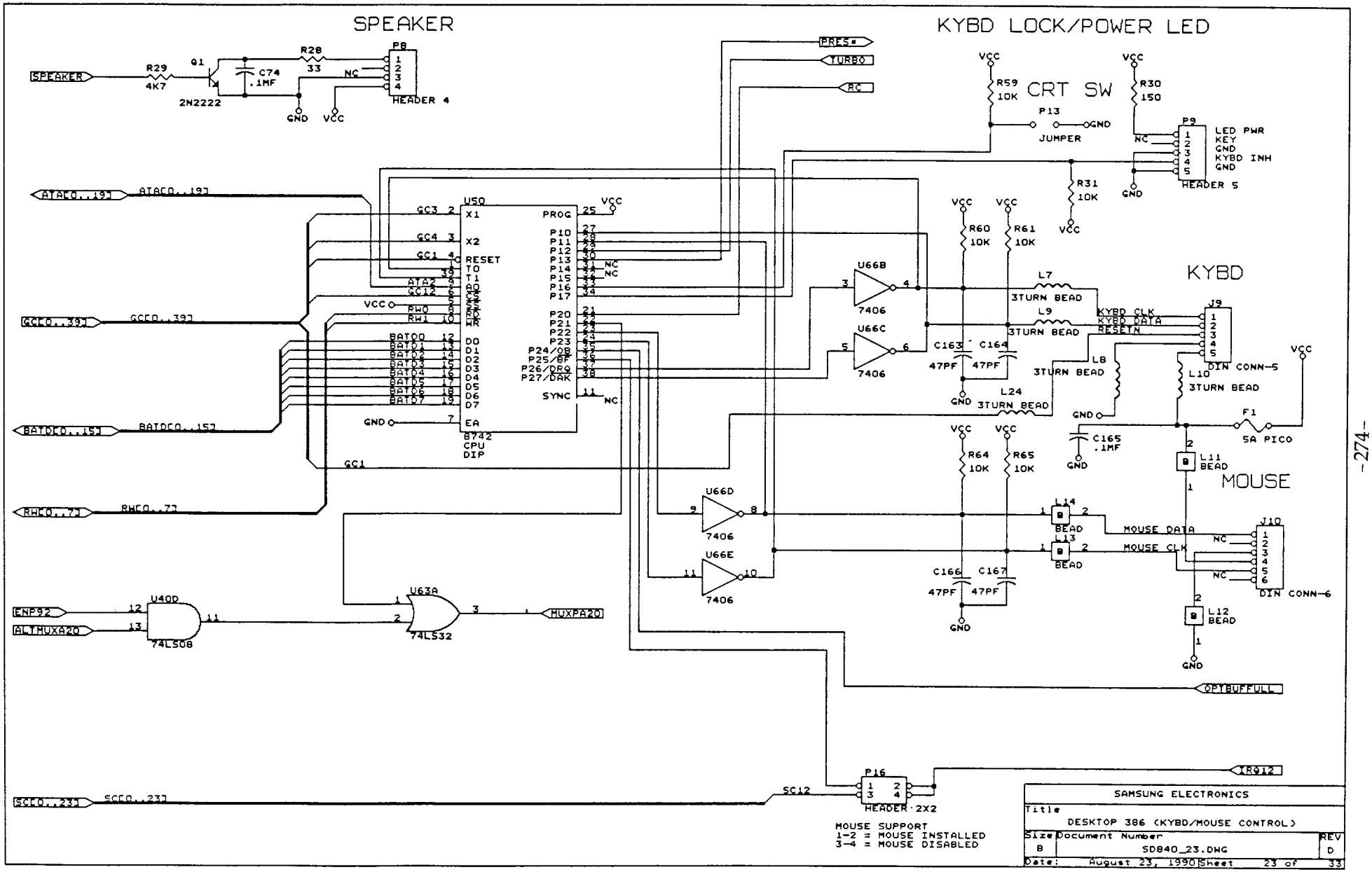
SPEAKER
KYBD LOCK/POWER LED
CRT SW
KYBD
MOUSE
SPEAKER
R29
4K7
Q1
2N2222
C74
.1MF
R28
33
NC
GND
VCC
P8
HEADER 4
PRES#
TURBO
RC
R59
10K
R30
150
P13
JUMPER
P9
LED PWR
KEY
GND
KYBD INH
GND
HEADER 5
R31
10K
ATAC0..19]
GCC0..39]
BATDC0..15]
RWC0..7]
U50
8742
CPU
DIP
X1
X2
RESET
T0
T1
A0
RD
WR
D0
D1
D2
D3
D4
D5
D6
D7
EA
PROG
P10
P11
P12
P13
P14
P15
P16
P17
P20
P21
P22
P23
P24/OB
P25/BF
P26/DRQ
P27/DAK
SYNC
U66B
U66C
U66D
U66E
7406
R60
10K
R61
10K
R64
10K
R65
10K
C163
47PF
C164
47PF
C166
47PF
C167
47PF
L7
3TURN BEAD
L9
3TURN BEAD
L8
3TURN BEAD
L10
3TURN BEAD
L24
3TURN BEAD
KYBD CLK
KYBD DATA
RESETN
J9
DIN CONN-5
C165
.1MF
F1
5A PICO
L11
BEAD
L12
BEAD
L14
BEAD
L13
BEAD
MOUSE DATA
MOUSE CLK
J10
DIN CONN-6
ENP92
ALTMUXA20
U40D
74LS08
U63A
74LS32
MUXPA20
OPTBUFFULL
IRQ12
SCC0..23]
SC12
P16
HEADER 2X2
MOUSE SUPPORT
1-2 = MOUSE INSTALLED
3-4 = MOUSE DISABLED
SAMSUNG ELECTRONICS
Title
DESKTOP 386 (KYBD/MOUSE CONTROL)
Size
B
Document Number
SD840_23.DWG
REV
D
Date: August 23, 1990
Sheet 23 of 33

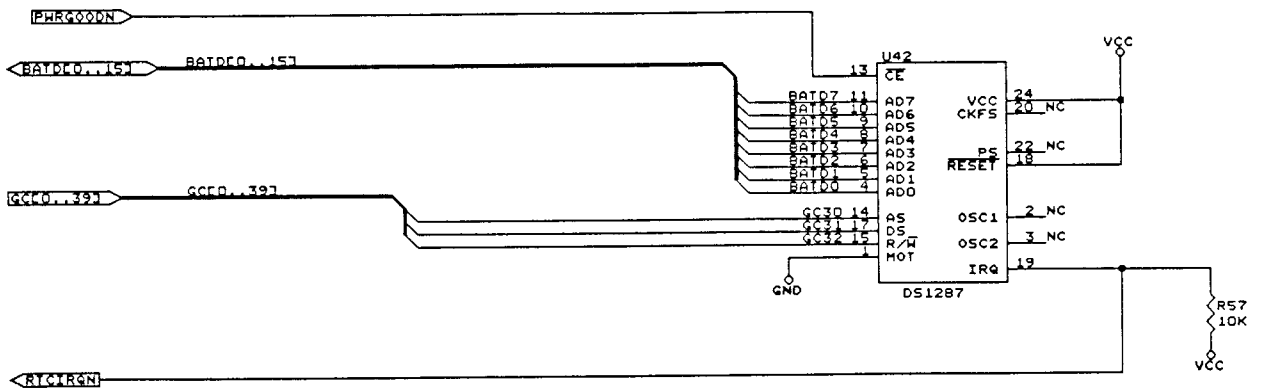

SAMSUNG ELECTRONICS		
Title: DESKTOP 386 (REAL TIME CLOCK)		
Size: B	Document Number: SD840_24.DWG	REV: D
Date: August 22, 1990	Sheet 24 of 33	

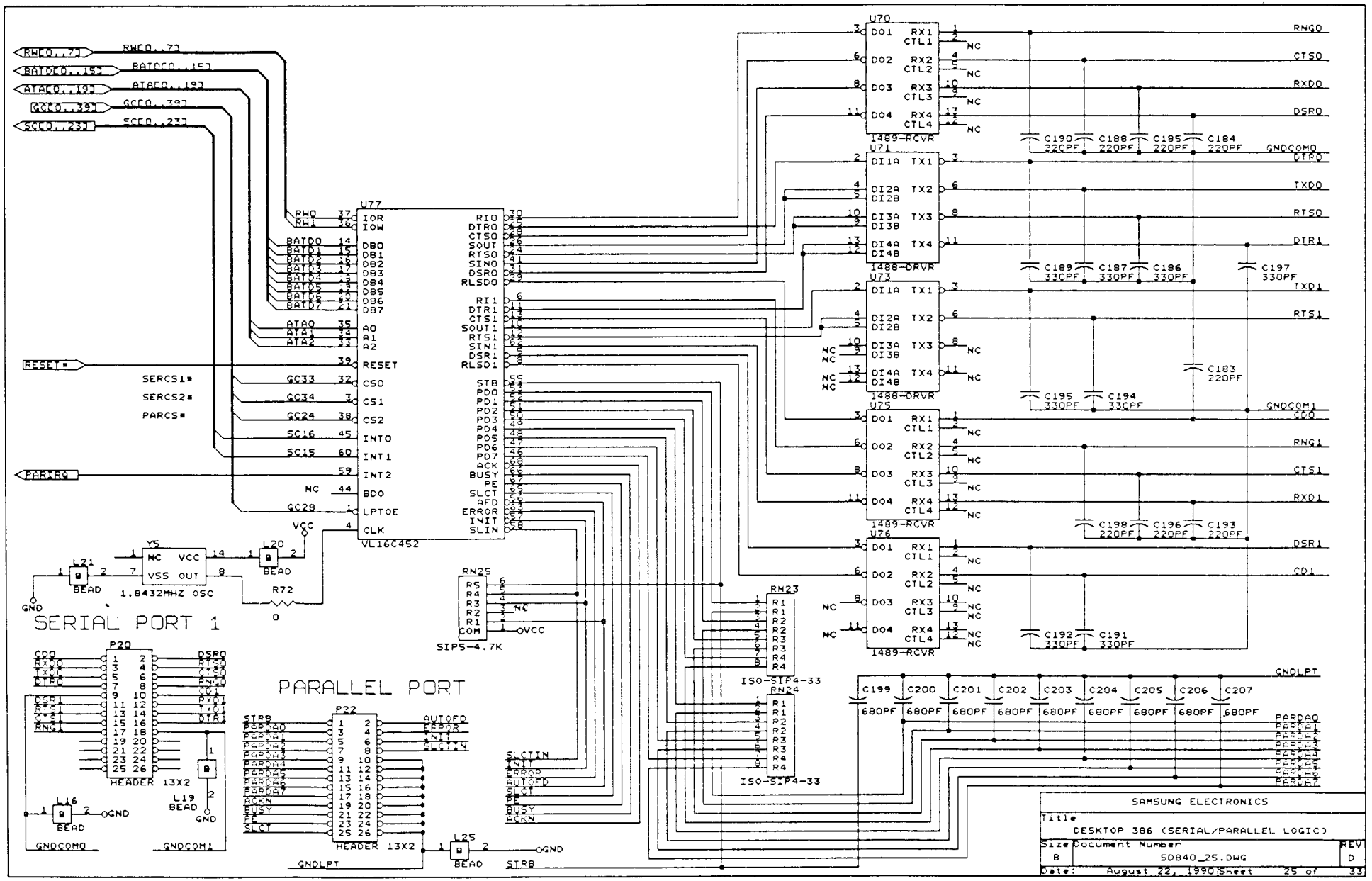
SERIAL PORT 1
PARALLEL PORT
U77
VL16C452
U70
U71
U73
U75
U76
1489-RCVR
1488-DRVR
RN23
RN24
ISO-SIP4-33
RN25
SIP5-4.7K
Y5
1.8432MHZ OSC
P20
HEADER 13X2
P22
HEADER 13X2
SAMSUNG ELECTRONICS
Title
DESKTOP 386 (SERIAL/PARALLEL LOGIC)
Size B
Document Number
SD840_25.DWG
REV D
Date: August 22, 1990
Sheet 25 of 33

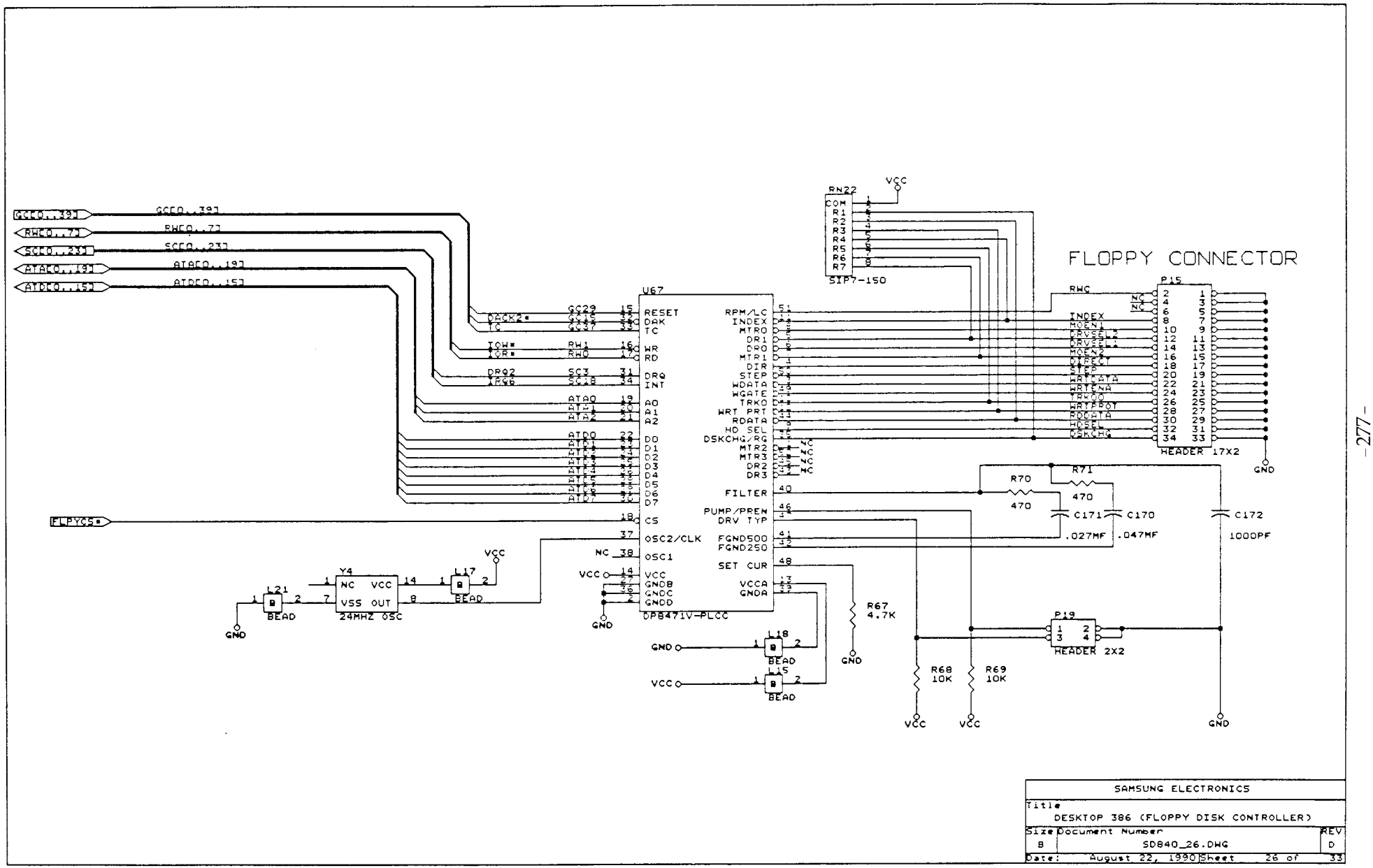

SAMSUNG ELECTRONICS		
Title: DESKTOP 386 (FLOPPY DISK CONTROLLER)		
Size: B	Document Number: SD840_26.DWG	REV: D
Date: August 22, 1990	Sheet 26 of 33	

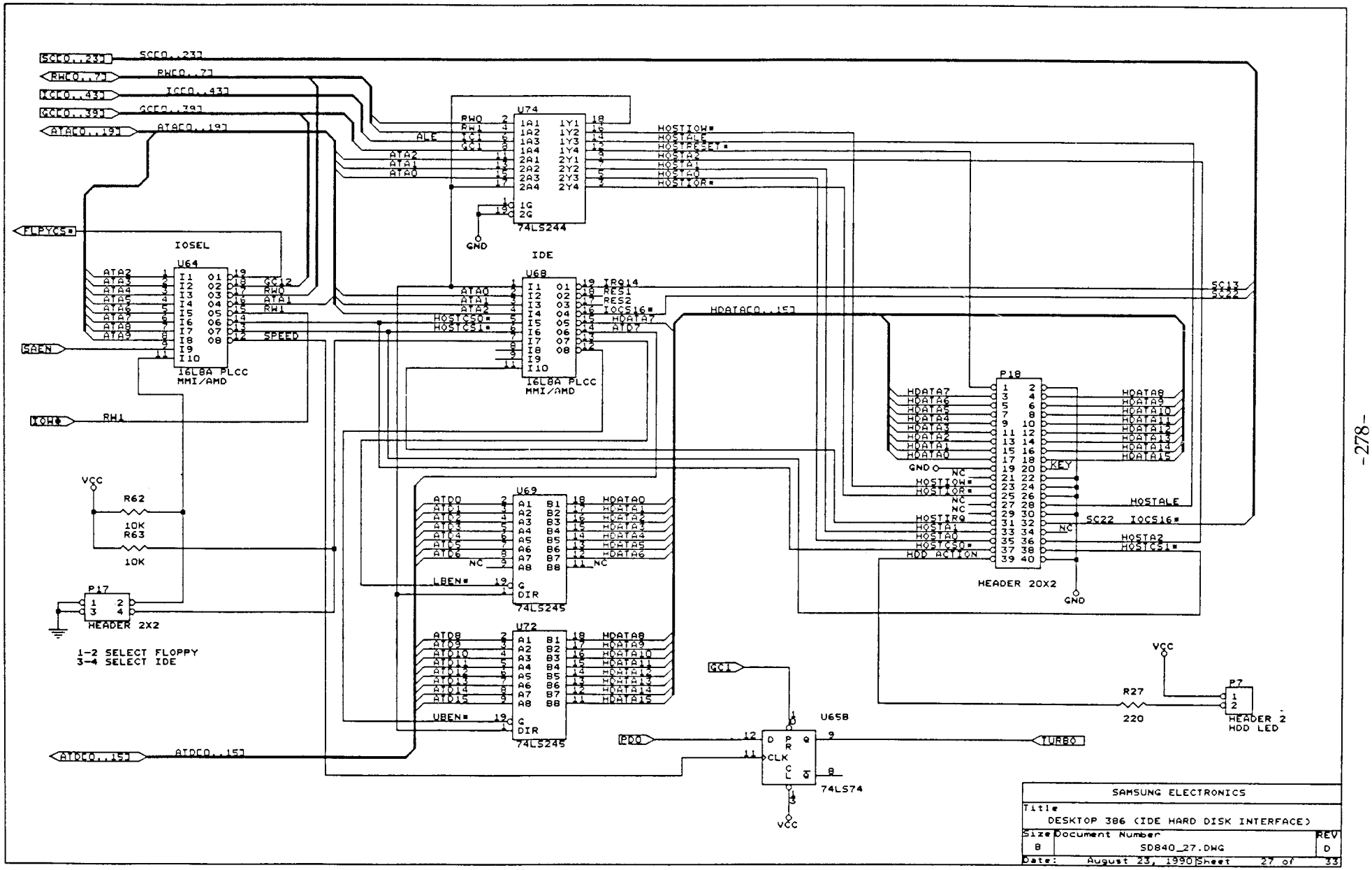

SAMSUNG ELECTRONICS		
Title: DESKTOP 386 (IDE HARD DISK INTERFACE)		
Size: B	Document Number: SD840_27.DWG	REV: D
Date: August 23, 1990	Sheet 27 of 33	

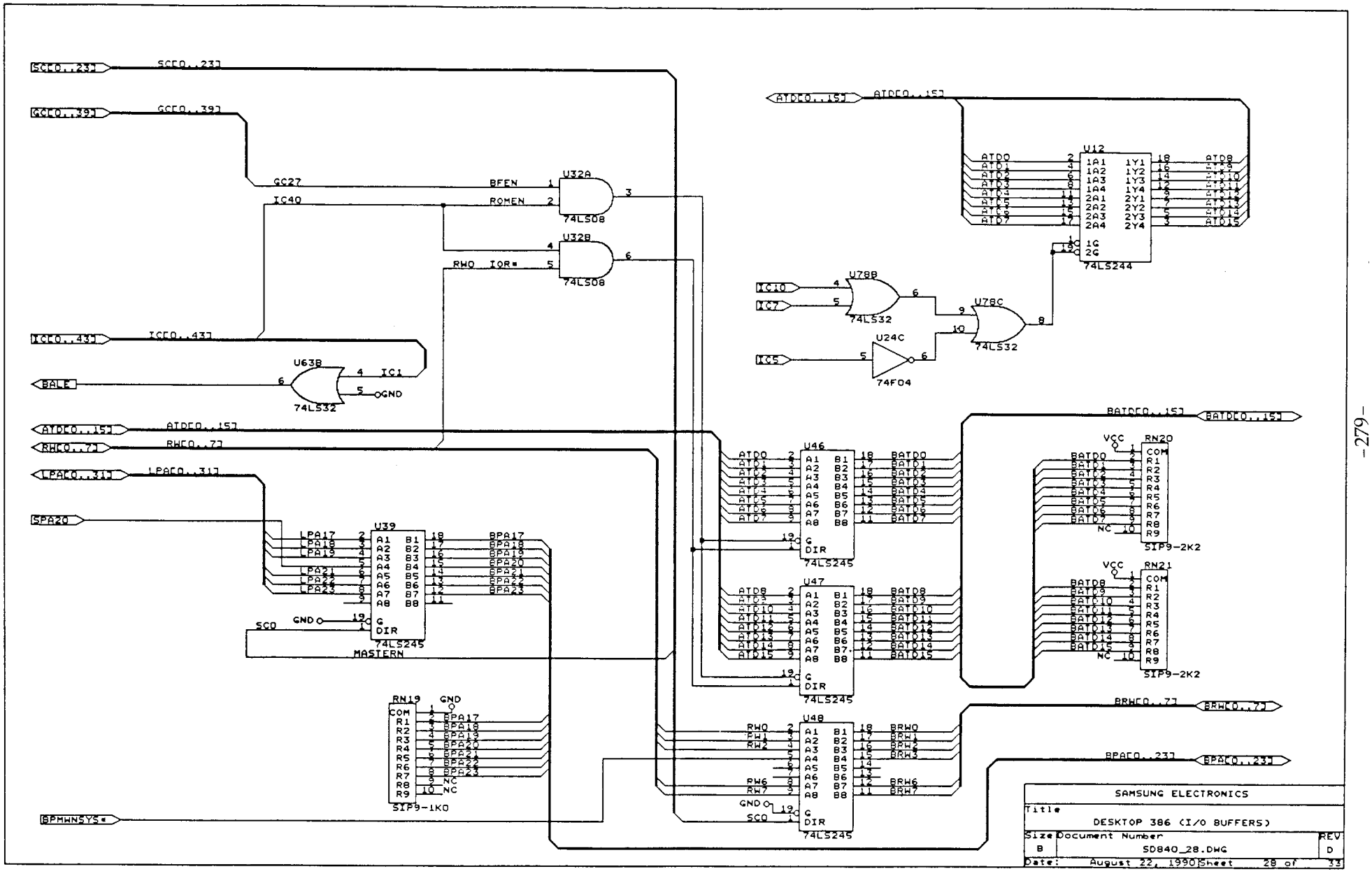
SCF0..23]
GCF0..39]
GC27
IC40
BFEN
ROMEN
U32A
74LS08
U32B
74LS08
RWO
IOR*
ICF0..43]
U63B
74LS32
BALE
IC1
GND
ATDF0..15]
RWF0..7]
LPAF0..31]
SPA20
U39
74LS245
MASTERN
SCO
RN19
SIP9-1K0
BPMWNSYS*
U12
74LS244
IC10
IC7
U78B
74LS32
U78C
74LS32
IC5
U24C
74F04
U46
74LS245
U47
74LS245
U48
74LS245
BATDF0..15]
RN20
SIP9-2K2
RN21
SIP9-2K2
BRWF0..7]
BPAF0..23]
VCC
SAMSUNG ELECTRONICS
Title
DESKTOP 386 (I/O BUFFERS)
Size B
Document Number SD840_28.DWG
REV D
Date: August 22, 1990 Sheet 28 of 33

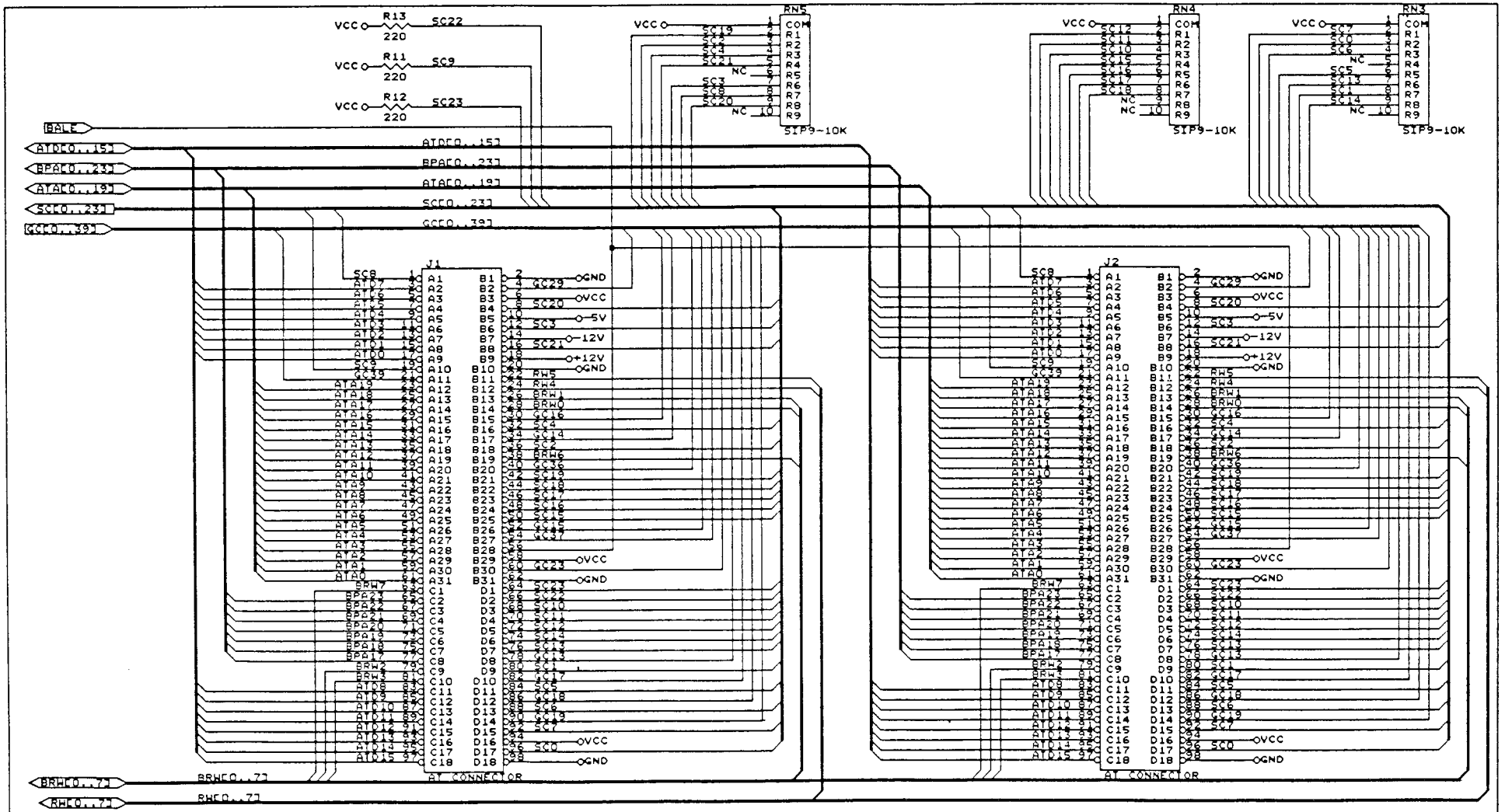

SAMSUNG ELECTRONICS

Title: DESKTOP 386 (I/O CONNECTORS 0/1)

Size	Document Number	REV
B	SD840_29.DWG	D

Date: August 22, 1990 Sheet 29 of 33

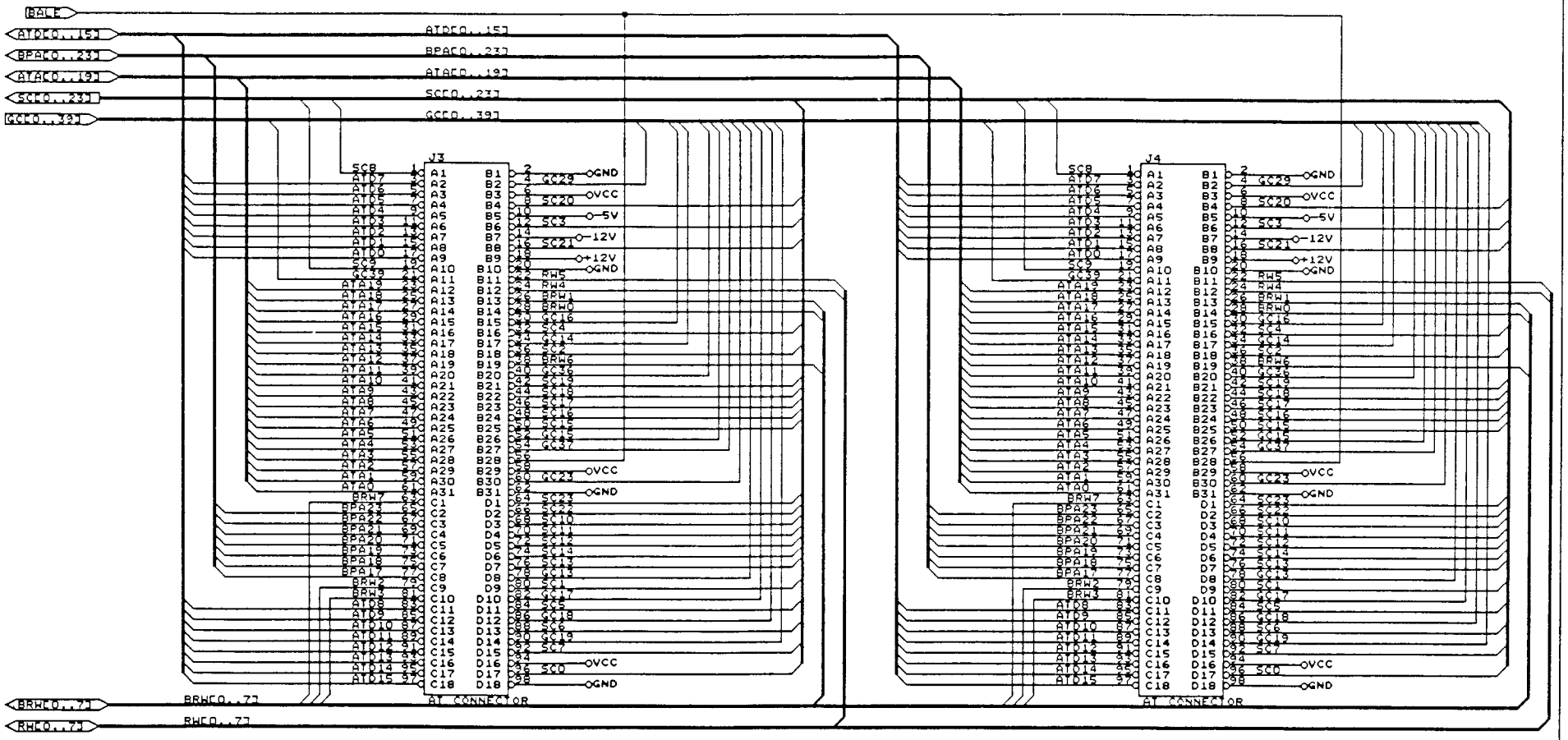

SAMSUNG ELECTRONICS		
Title: DESKTOP 386 (I/O CONNECTORS 2/3)		
Size: B	Document Number: SD840_30.DWG	REV: D
Date: August 22, 1990	Sheet 30 of 33	

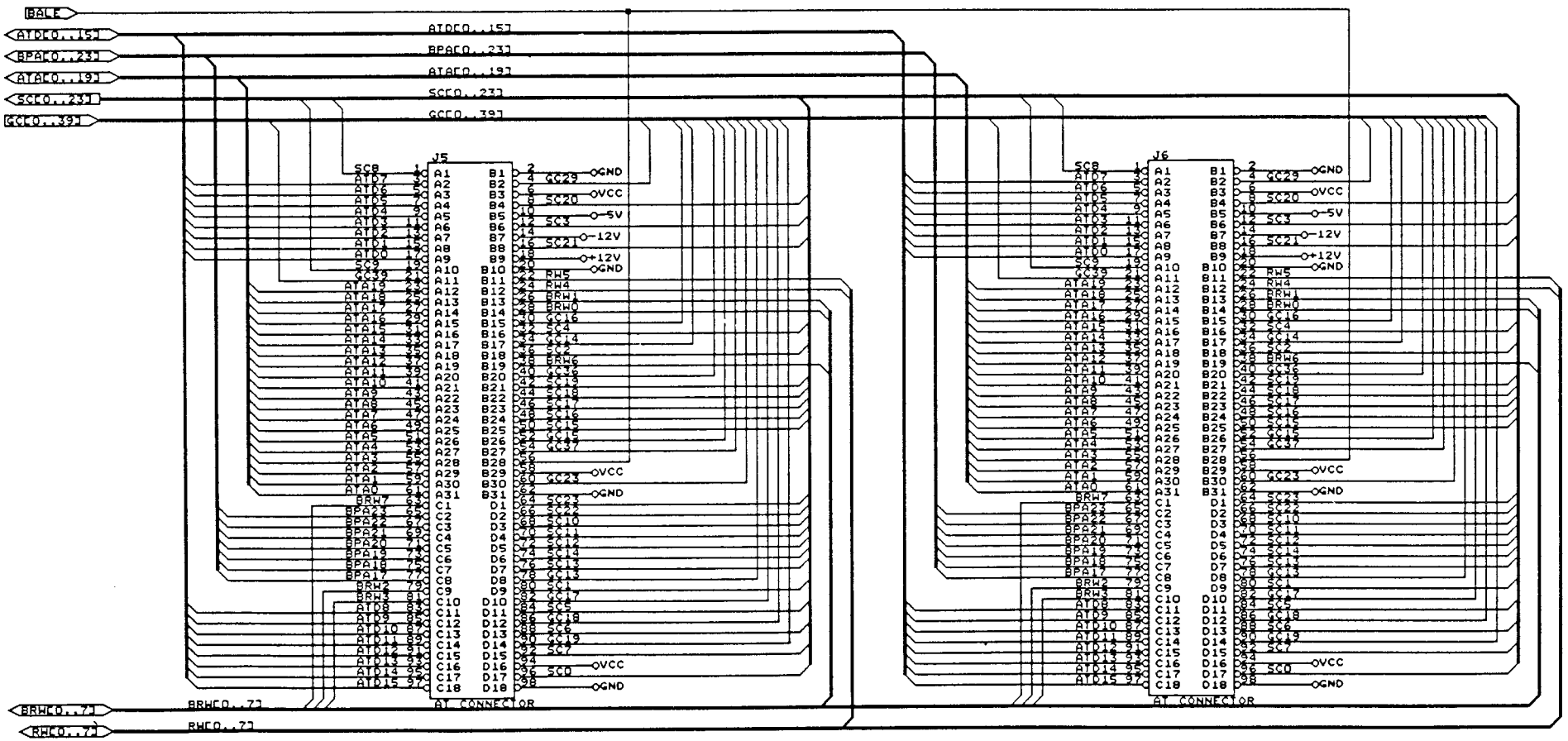

SAMSUNG ELECTRONICS		
Title: DESKTOP 386 (I/O CONNECTORS 4/5)		
Size: B	Document Number: SD840_31.DWG	REV: D
Date: August 22, 1990	Sheet 31 of 33	

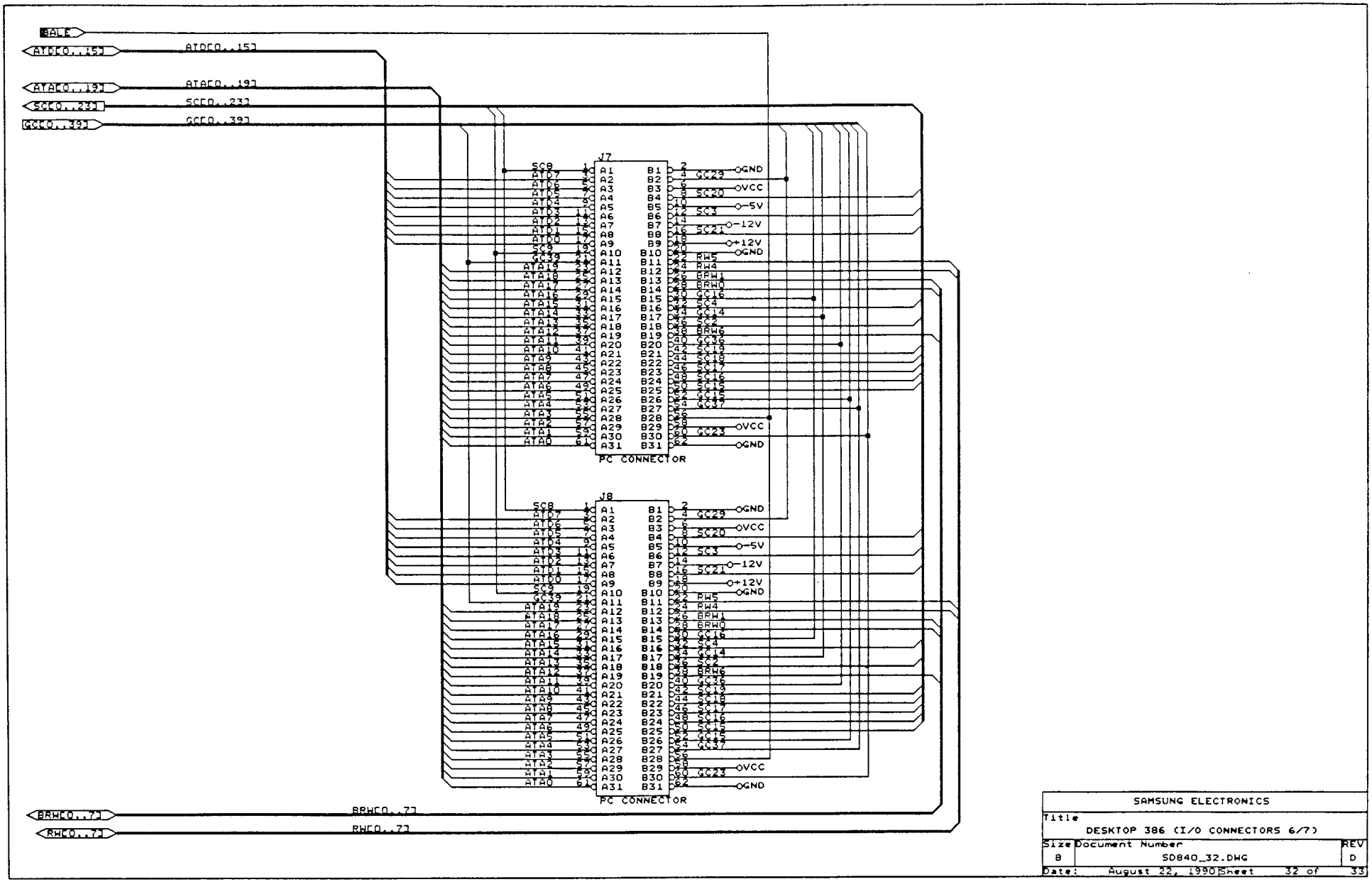

SAMSUNG ELECTRONICS		
Title: DESKTOP 386 (I/O CONNECTORS 6/7)		
Size: B	Document Number: SD840_32.DWG	REV: D
Date: August 22, 1990	Sheet 32 of 33	

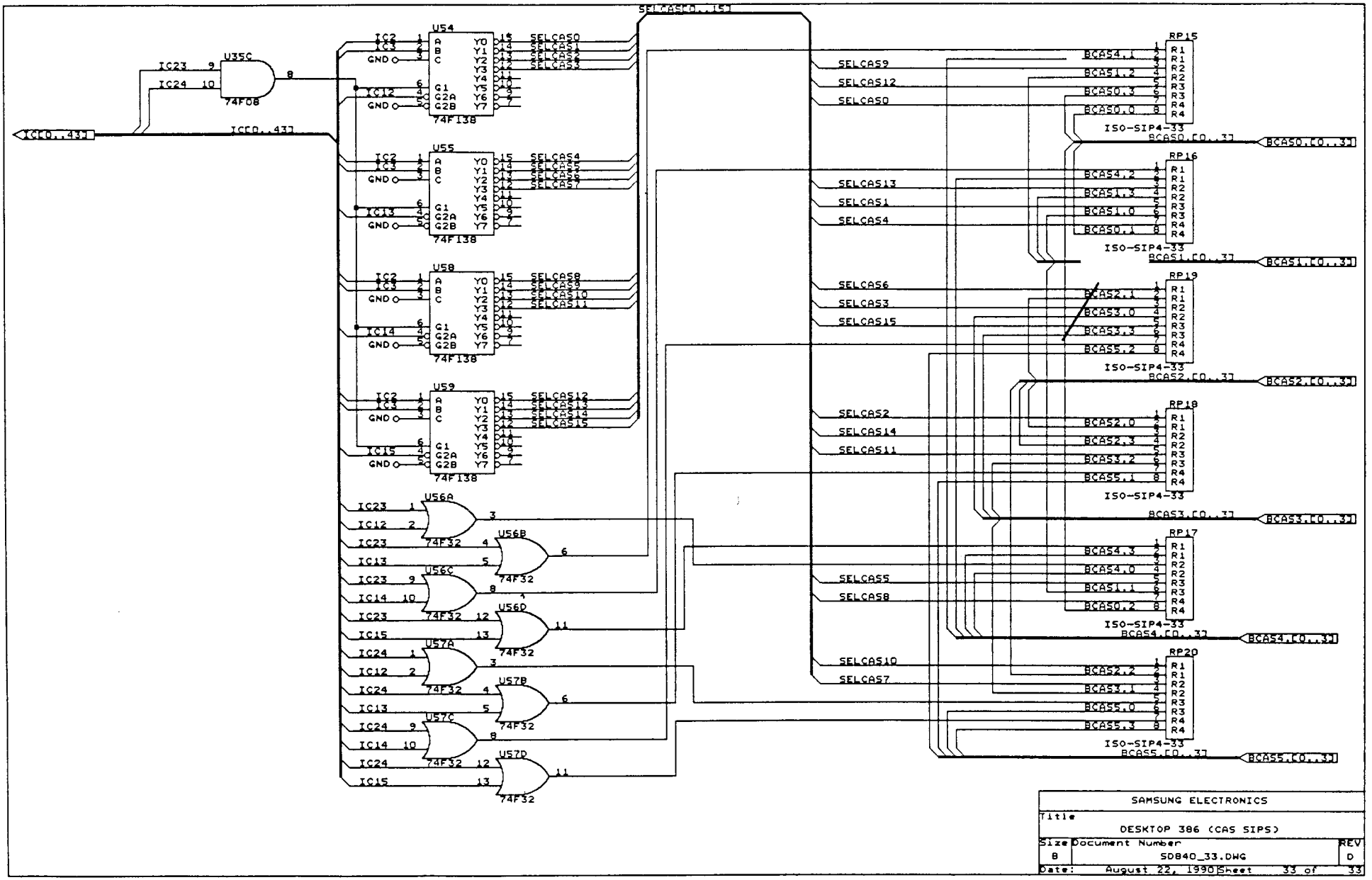
SELCAS[0..15]
ICC[0..43]
U35C
74F08
U54
U55
U58
U59
74F138
U56A
U56B
U56C
U56D
U57A
U57B
U57C
U57D
74F32
RP15
RP16
RP19
RP18
RP17
RP20
ISO-SIP4-33
BCAS0.[0..3]
BCAS1.[0..3]
BCAS2.[0..3]
BCAS3.[0..3]
BCAS4.[0..3]
BCAS5.[0..3]
SAMSUNG ELECTRONICS
Title
DESKTOP 386 (CAS SIPS)
Size B
Document Number
SDB40_33.DWG
REV D
Date: August 22, 1990
Sheet 33 of 33