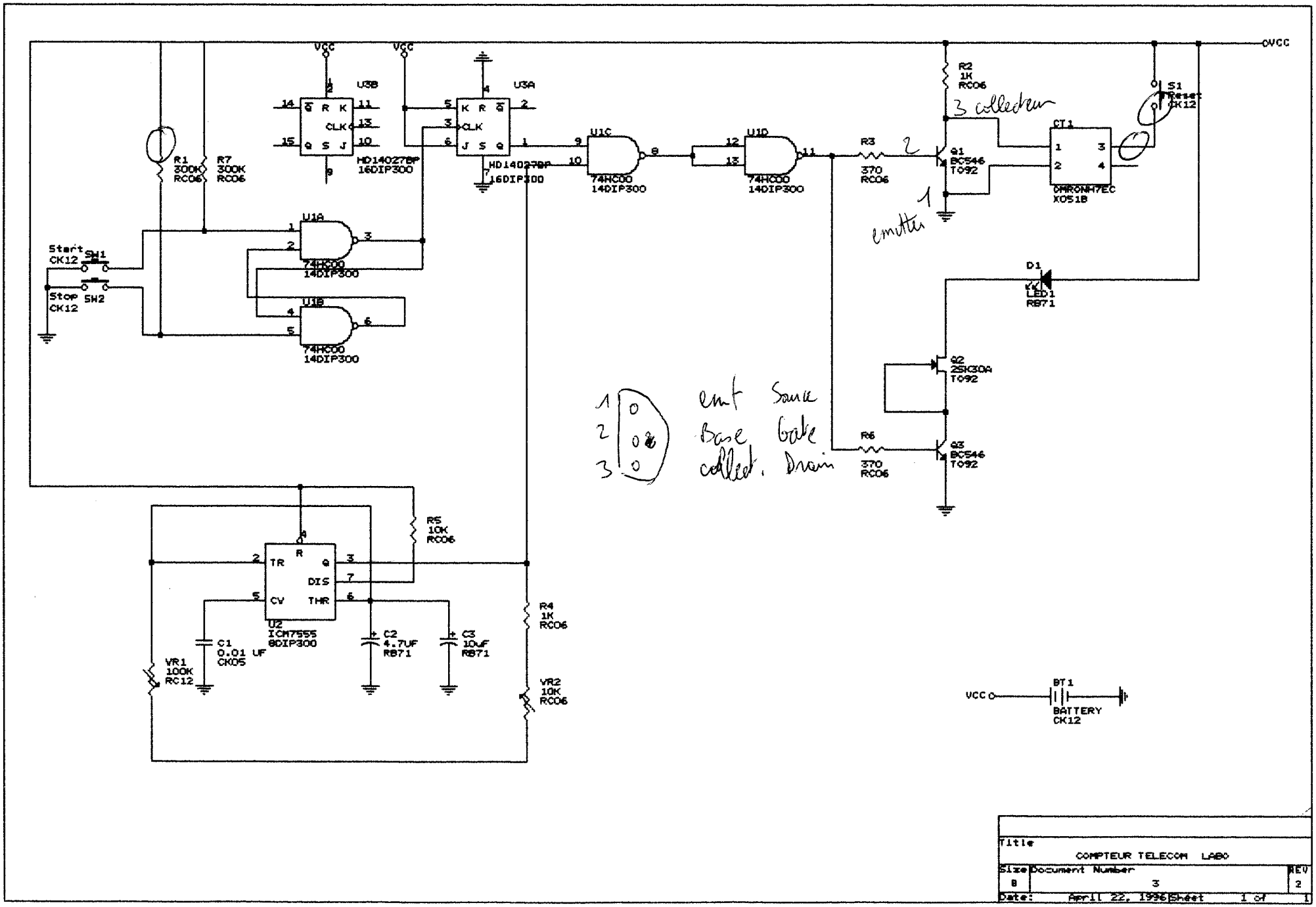
VCC
U3B
U3A
HD14027BP
16DIP300
U1C
U1D
U1A
U1B
74HC00
14DIP300
R1
300K
RC06
R7
300K
RC06
R2
1K
RC06
R3
370
RC06
Q1
BC546
TO92
CT1
OMRONH7EC
XO51B
S1
Reset
CK12
Start
CK12
SW1
Stop
CK12
SW2
D1
LED1
RB71
Q2
2SK30A
TO92
Q3
BC546
TO92
R6
370
RC06
R5
10K
RC06
U2
ICM7555
8DIP300
TR
CV
R
Q
DIS
THR
C1
0.01 UF
CK05
C2
4.7UF
RB71
C3
10uF
RB71
R4
1K
RC06
VR1
100K
RC12
VR2
10K
RC06
BT1
BATTERY
CK12
3 collecteur
2
1
emitter
1 emt Source
2 Base Gate
3 collect. Drain
Title
COMPTEUR TELECOM LABO
Size B
Document Number 3
REV 2
Date: April 22, 1996
Sheet 1 of 1