PP40 SERIES

MAINTENANCE MANUAL

Stag Microsystems Ltd
Martinfield
Welwyn garden City
Herts AL7 1JT
United Kingdom

Tel: (0707) 332148
Fax: (0707) 371503

Stag Microsystems, Inc.
1600 Wyatt Drive
Santa Clara, CA 95054
USA

Tel: (408) 988-1118
Fax: (408) 988-1232

Stag Microsystems, Inc
3 Northern Blvd
Amherst, NH 03031
USA

Tel: (603) ~~673-4380~~ 668-4978
Fax: (603) 673-1915

803 1075 Rev.2

Reply Card

In keeping with our Company policy of continuous enhancement this manual will be under constant review and will be updated when required. In order that the updated versions are addressed correctly could the following manual registration form be completed and returned for the attention of the Service Manager, Stag Microsystems Limited.

Questionnaire

User's Name: . . . . . .

Title: . . . . . .

Company: . . . . . .

Address: . . . . . .

. . . . . .

. . . . . .

Telephone: . . . . . .

Telex: . . . . . .

Fax No: . . . . . .

Type of machine to which the manual applies: . . . . . .

Serial No: . . . . . .

Error Detection

This maintenance manual is supplied as an enhancement to Stag's co-ordinated international team effort.

Therefore, should any errors be detected, we would be grateful if you would contact us as soon as possible as to the nature of the mistake. Likewise, if you would like to see improvements by adding your own ideas or modifications, then please do not hesitate to contact us.

PP40 Series Maintenance Manual

Using this manual

This manual is divided into six sections, each section deals with a specific requirement that at some time a Service Engineer may be required to know. This manual assumes that the Service Engineer is familiar with the operating procedures of the PP40/1/2 or ZL33 programmer. If information is required on the operation of any of these, please refer to the relevant Operating Instruction Manual.

This manual wherever possible is laid out in easy to follow procedures, the Performance Section (Section 2.0) provides a means of proving the performance of a unit before despatch to a customer. The Calibration Procedure (Section 3.0) gives the procedure for calibrating a known working unit and the Maintenance Procedure Section (Section 4.0) allows for fault isolation within a failed unit.

Available for the PP40 series is a Calibration and Test Module - 40CAT - this module is used repeatedly throughout the procedures of this manual.

All measurements referred to in this manual have been taken using a digital muti-meter type Data Precision 2480R and Oscilloscope type Tektronic 2445.

Contents

Section 1 **Technical Overview**

1.1 Technical Description
1.2 Programmable Voltage Clamp Overview
1.3 Programmable Voltage Clamp Description
1.4 Vcc Generator
1.5 Fault Detection
1.6 PAD, TTL and OC Lines
1.7 Control Lines
1.8 Personality Module Interface
1.9 Display Control
1.10 Current Sources

Section 2 **Performance Check**

2.1 Check Software Revisions
2.1.1 Check Module Software Revision
2.1.2 Check Mainframe Software Revision
2.3 Check Keyboard Operation
2.4 Check LED Indication Operation
2.5 Check Programming Circuitry Operation
2.6 Display Test
2.7 Static RAM Test
2.8 Display Dynamic RAM Size
2.9 Dynamic RAM Test
2.10 Test RS232C Ports
2.11 RS232C Ports 1 and 2 Selftests
2.12 Check Operation of ZIF Sockets

Section 3 **Calibration Procedure**

Section 4 **Maintenance Procedure**

4.1 Equipment Required
4.2 Procedure
4.3 Calibrate
4.4 Selftest
4.4.1 Latch Test
4.4.2 Static RAM Test 1
4.4.3 Static RAM Test 2
4.4.4 Static RAM Test 3
4.4.5 Mainframe EPROM Checksum Test
4.4.6 Module EPROM Checksum Test
4.4.7 Clamp Calibration Test
4.4.8 Module EPROM Overlay Lines (OLY) Test
4.4.9 LED Latch and Loopen Test
4.4.10 PAD, LC and HC Lines Pulldown Test

4.4.11	PADL Test 1
4.4.12	PADL Test 2
4.4.13	PADL Hammer Driver Test
4.4.14	PADH Hammer Driver Test 1
4.4.15	PADH Test
4.4.16	PADH Hammer Driver Test 2
4.4.17	LC Hammer Driver Test 1
4.4.18	LC Test
4.4.19	LC Hammer Driver Test 2
4.4.20	HC Hammer Drivers 1
4.4.21	HC Test
4.4.22	HC Hammer Drivers 2
4.4.23	TTL Driver Test 1
4.4.24	TTL Driver Test 2
4.4.25	OC Driver Test 1
4.4.26	OC Driver Test 2
4.4.27	HC Hammer Drivers Current Sink Test
4.4.28	LC Hammer Drivers Current Sink Test
4.4.29	Not Used
4.4.30	Not Used
4.4.31	30mA LC Sources Bits 0-7
4.4.32	60mA LC Sources Bits 0-7
4.4.33	90mA LC Sources Bits 0-7
4.4.34	120mA HC Sources Bits 0-3
4.4.35	120mA HC Sources Bits 4-7
4.4.36	60mA HC Sources Bits 0-3
4.4.37	240mA HC Sources Bits 4-7
4.5	Test PAD Read Comparators
4.6	Observing Test Waveforms Using CAT40
4.7	Pull Up / Pull Down Resistor Test 1
4.8	Pull Up / Pull Down Resistor Test 2
4.9	Address Line Test 1 (PAD 0 to PAD 7)
4.10	Address Line Test 1 (PAD 8 to PAD 15)
4.11	Pull Down Test 1 (PDL 0 to PDL 7)
4.12	Pull Down Test 2 (PDH 0 to PDH 7)
4.13	30mA Low Current Source Off Load
4.14	30mA Low Current Source On Load
4.15	60mA Low Current Source Off Load
4.17	60mA Low Current Source On Load
4.18	60mA Medium Current Sources Off Load
4.19	60mA Medium Current Sources On Load
4.20	120mA Medium Current Source Off Load
4.21	120mA Medium Current Source On Load
4.22	120mA High Current Sources Off Load
4.23	120mA High Current Sources On Load
4.24	240mA High Current Sources Off Load
4.25	240mA High Current Sources On Load
4.26	TTL Drive Test Capability
4.27	Open Collector Drive Test Capability
4.28	PVCC Test 1(square wave)
4.28.1	PVCC Test 2 (ramp)
4.28.2	PVCC Test 3 (walk)
4.28.3	PVCC Test 4 (Slew Rate Capability)
4.29	PVCC Test 5, Current Generator On (square wave)
4.29.1	PVCC Test 6, Current Generator On (ramp)
4.29.2	PVCC Test 7, Current Generator On (walk)
4.29.3	PVCC Test 8, Current Generator On (Slew Rate Capability)
4.30	Voltage Clamp Tests
4.31	Voltage Clamp Test 1 (square wave)

4.31.1 Voltage Clamp Test 2 (ramp)
4.31.2 Voltage Clamp Test 3 (walk)
4.31.3 Voltage Clamp Test 4 (Slew Rate Capability)
4.32 Display Test
4.33 Static RAM test
4.34 Static RAM Re-boot
4.35 Test "OLY" Lines
4.36 Checksum the System PROM
4.37 Checksum the Module PROM
4.38 Display Dynamic RAM Size
4.39 Dynamic RAM Test
4.40 Test RS232 Ports
4.41 RS232 Ports 1 and 2 Selftests
4.42 RS232 Port 1 Selftest
4.43 RS232 Port 2 Selftest
4.44 RS232 Fault Diagnostic Methods
4.45 RS232 Output Port 1 (option A)
4.46 RS232 Output Port 2 (option A)
4.47 RS232 Input Port 1 (option A)
4.48 RS232 Input Port 2 (option A)
4.5 Power Supply Operation

Section 5 **Components and Items Lists**

Section 6 **Circuit Diagrams and Placement**

Section 1 Technical Overview

The PP40 Series of programmers consists of the following systems:

PP40 programmer with modules type: 40M100, 40M101, 40M102.

PP41 programmer with modules type: 41M100, 41M101, 41M102, 41M9xx (series) and 41M200.

PP42 programmer with modules type: 42M100 and 42M101.

ZL33 programmer with module type: 33M100.

The programmers contain the same mainframe PCB/PSU. The differences being the Mainframe software and type of keyboard fitted.

The combined RAM/RS232 PCBs are interchangeable between the programmers with this capability:

The modules type 40M100, 40M101, 40M102 contain the same PCB as the equivalent PP41 modules with the differences being the Module software fitted and label.

PP40, PP41 programmers are only capable of programming in "GANG MODE", the PP42 programmer being capable of programming in "SET MODE" requires more complex modules as each socket requires its own DATA driver circuitry.

Section 1.1 Technical Description

Central Processor Unit (CPU)

The microprocessor used in the PP40 series programmers is the 68B09E (IC2).

Inputs	From	Line Status	Purpose
E	Clock		All CPU timings.
Q	Clock		All CPU timings.
/IRQ	RS232C	high	Signalling when data has arrived at the ports.
/FIRQ	(IC72)	high	Signalling when a key has been pressed.
/NMI	(IC72)	high	Can be programmed to be active on the falling edge of /SAFE line.
/RES	(IC7)	high	Power on reset.

68B21 PIA (IC72)

The key depressions are detected by driving the keyboard with 10 outputs from the PIA of which one is high and the rest low. Reading the 4 inputs to the PIA enables the exact key to be determined. The horn is driven by transistor TR38 which is connected to the CB2 output of IC72.It also handles the fault reaction on sensing /SAFE line.

Inputs	Outputs	Purpose
D-bus		Bi-directional data transfer
BR/W		Direction control.
BE		PIA timing.
/KEY		PIA chip select.
LA0-1		PIA internal register.
/FIRQ		6809 I/O interrupt.
/BRES		Only used on power-up.
/NMI		Sometimes generated on /SAFE.
KBD10-13		Detects Key presssed.
/SAFE		Generated on a fault condition.
BUSY		Indicates when display is ready.
	horn	Sounds the horn.
	KBD0-9	Moving strobe selects which group of keys is being read.

Section 1.2 **Programmable Voltage Clamp Overview.**

Three programmable voltage clamps are available, these are VC1, VC2 and VC3. They provide the reference voltage which enables the drivers to be "clamped" to a preset value. The resultant voltage applied to a pin of a device to be programmed can thus be set to a precise degree of accuracy. Any excess current not required by the device to be programmed is dealt with by each of the clamps current sink circuitry. The voltage clamps are similar in design with the exception of VC3 which has circuitry to allow for programmable Slew rates. This is used to set the rise time of the leading edges of programming waveforms.

Section 1.3 **Programmable Voltage Clamp Technical Description. (VC1)**

The digital to analogue converter (DAC) is programmed from the processor and generates at it's output a proportional current. This current is conditioned and converted into a voltage via IC70 & RN57. The /COC line when pulled low turns on the two current sources TR63/R153 and TR62/R135 , this has the effect of turning on the clamp. Transistor TR61 presents the output voltage (minus a diode drop) at the base of the clamping transistor TR10. Any resultant voltage drop across is used to detect excessive current sinking into the clamp. Capacitor C12 provides a fixed voltage slew rate. The two diodes D27 & D28 prevent the base of TR10 going negative.

Section 1.4 **Vcc Generator:**

A fourth programmable voltage clamp is used in the PVCC supply circuit. This circuit has its own dedicated driver stage. This supplies power to the device to be programmed (VCC pin). The voltage output is programmed in steps of 0.05V per BIT and a current up to 1.7A can be obtained. The voltage slew rate can be programmed to be 1V/uS, 0.5V/uS or 0.25V/uS (approximately).

Section 1.5 **Fault Detection**

If any of the clamps sink excessive currents, a fault condition is generated and the /SAFE line is lowered with all latches being cleared. The level of sink current is measured by the voltage drop across a sense resistor on the collector clamping transistor (eg R13 for clamp 2). This voltage is compared against a reference voltage VREF, using the comparitors in IC71. The SWF line is controlled by the processor and allows a quick method of resetting latches by itself inducing /SAFE to be activated.

Section 1.6 **PAD , TTL & OC lines**

These lines are generated on the motherboard for use by modules.

a) TTL 0-8 : These are normal TTL lines generated by IC48.
For protection they have clamping diodes to 5V and series resistors.

b) OC 0-8 : These lines are open collector outputs driven by 75461 drivers. They have no pull resisters associated with them. If required it would be achieved on the programming module.

c) PAD0-15 : These lines are driven by 75461 open collector drivers.Each line can be independently read back via LM339 comparitors. PAD lines can also be programmed to have any combination of the various pull up/down resistors, by the appropriate settings of UL102,UL103 DL103 & DL104 lines.

Section 1.7 **Control lines**

VON & DVON	Used to turn on the current source for the VCC generator.
CON & COV,COC	CON controls both /COV and /COC lines. /COV turns on the VCC generator. /COC turns on the other 3 voltage clamps.
BUSY	Indicates the display is ready to be written to.
ULL & UL102	Used to provide 1K pull up resistors for PAD, LC & HC lines.
ULH & UL103	Used to provide 10K pull up resistors for PAD, LC & HC lines.
DLM & DL103	Used to provide 10K pull down resisters for PAD, LC & HC lines.
DLH & DL104	Used to provide 100K pull down resisters for PAD, LC & HC lines.
VR1/2 & DVR1/2	Used to control the slew rate on the VCC generator.
RD1/2 & DRD1/2	Used to control the slew rate on clamp 3.
SHCL/H & HCL/H	Turns on/off the supply voltage required by HC4-7 current sources.
SMCL/H & MCL/H	Turns on/off the supply voltage required by HC0-3 current sources.
SLCL/H & LCL/H	Turns on/off the supply voltage required by LC0-8 current sources.
PUH0-7	Turn on/off the HC high current sources.
PUL0-7	Turn on/off the LC low current sources.
PDH0-7	Grounds the output of HC current sources.
PDL0-7	Grounds the output of LC current sources.
OLY0-2	Used to page in different sections of the EPROM residing on the module
SWF	Used to cause the /SAFE generate a latch clear signal.
/SAFE	Clears all latches
LA0-15	Processor address bus.
D0-7	Processor data bus.
RWP & BRWP	Used to prohibit access to DRAMs.
/SEE	Used to select system EPROM at E000-FFFF
/SSE	Used to select static RAM at D000-d7FF
/SG1	Used to select short devices at D7C0-D7FF
/SG2	Used to select short devices at DFC0-DFFF
/MSE	Used to select module at C000-CFFF
/MEE	Used to select module EPROM at 8000-BFFF
/RAM	Used to select dynamic RAM at 0000-7FFF
/SRW	Selects read/write latches at DFC0-DFFF

/SOD	Selects latches which overlay on SRAM at D7C0-D7FF
/KEY	Selects the PIA (IC72)
/U1E	Selects UART1
/U2E	Selects UART2
/DAC	Selects voltage clamps
/DBE	Selects drive bank latches
/RBE	Selects ram bank latch.
/DSE	Selects display data latch.
/RTL	Selects rise time latch.
/HSL	Selects hardware status latch.
/PCL	Selects control and load latch.
/ADL	Selects address low drive comparitor.
/ADH	Selects address high drive comparitor.

Section 1.8 **Personality Module Interface**

Two connectors provide module/mainframe interface. These connectors carry module supply lines, pin drives/sense signals in addition to a buffered address and data lines.

Section 1.9 **Display Control**

The alpha numeric display is powered by the output of a voltage invertor (IC53). The controller (IC52) for the display is supplied with serial data generated from a parallel to serial converter (IC84). Clock and data flow control is handled by 3 flip-flops(IC59). A busy signal is generated to tell the processor when it's ready to accept new data.

Section 1.10 **Current Sources.**

The PP40 series of programmers has 32 current drivers. They are located on circuit diagram sheet 3 of 5.

The are divided into Low current drivers (LC) and High current drivers (HC).

The Low current drivers LC0 to LC7 are capable of sourcing 30mA or 60mA.

The 30mA Low current drivers are TR45, TR41, TR33, TR29, TR43, TR39, TR31, TR27. They are supplied via TR51.

The 60mA Low Current drivers are TR44, TR40, TR32, TR28, TR42, TR38, TR30, TR26. They are supplied via TR50.

A 90mA Current source is obtained by turning on both a 30mA and 60mA Current source, IE TR45 and TR44. Because the transistors' collectors share the same line, a 90mA source capability is achieved.

The High current drivers HC0 to HC7 are capable of sourcing 60mA, 120mA and 240mA.

The High current drivers HC0 to HC3 are referred to in the maintenance manual as the Medium Current drivers.(MCH)

The 60mA High current drivers are TR15, TR14, TR9, TR4.

The 120mA High current drivers are TR18, TR13, TR8, TR3, TR17, TR12, TR7, TR2.

The 240mA High current drivers are TR16, TR11, TR6, TR1.

The 60mA drivers are supplied vie TR24

The 120mA drivers are supplied via TR21 and TR23.

The 240mA drivers are supplied via TR22.

Section 2 Performance Check

This section of the manual describes a method for the complete functional checking of one of the PP40 series programmers prior to its shipment to a customer. It can also be used for the routine checking of one of these programmers. If a failure is suspected or detected refer to the maintenance section (Section 4.0) of this manual.

Equipment Requirements.

1. CAT40 Module.

Section 2.1 Check Software Revisions

If the programmer and its module(s) are new units it is recommended that the software revisions of the units are checked and confirmed to being the latest prior to shipment to the customer.

Section 2.1.1 Check Module Software Revision

With the module in place, power on.

Press the SET key followed by the "6" key.

The Module type and revision will now be displayed.

Ensure that the module is at the latest revision.

Section 2.1.2 Check Mainframe Software Revision

With no module in place, power on.

Press the SET key followed by the "6" key.

The mainframe type and revision will now be displayed.

Ensure that the mainframe is at the latest revision.

Section 2.3 Check Keyboard Operation

With a module in place, power on the unit. Depress each key of the keyboard in turn and ensure that the horn sounds or that the function relevant to the key pressed is entered.

If the horn does not sound ensure that the horn is turned on by selecting horn on/off function.

Press the SET key followed the "F" and "1" key.

Section 2.4 **Check LED Indication Operation**

The LEDs used in the PP40 series programmers are bi-coloured and can be set to display in RED (to indicate FAIL) or GREEN (to indicate PASS).

The operation of the LEDs to display RED can be checked without any devices being used. For the MASTER socket press the LOAD key or in the case of a PP40 the checksum key. The MASTER LED will now indicate RED. The SLAVE LEDs can be checked by pressing the EMPTY key which will result in the SLAVE LEDs indicating RED.

for this test, use the EPROM from the CAT40 module. BE CAREFUL NOT TO DAMAGE THIS PROM! Consult other manual (operating) if need be. (Chapt. 3, pgs 3.2-01 and 3.7-02)

*The operation of the LEDs to display GREEN can be checked with the use of Test devices. For the module to be checked configure the programmer for the relevant device. Place the device in the Master socket and press the LOAD key or in the case of a PP40 press the CHECKSUM key. The programmer will proceed to load or read the device but more importantly, the MASTER LED will indicate GREEN. The same device can then be placed into each of the SLAVE sockets in turn and the [redacted] key pressed. Each time the SLAVE LED should indicate GREEN.

VERIFY

Section 2.5 **Check Programming Circuitry Operation**

The programming circuitry can be checked with the use of the CAT40 module (Calibration and Test module). This module is fitted in place of the programming module.

The CAT40 module contains Test routines entered via the keyboard.

Ensure the programmer is powered off and insert the CAT40 module. Power on the unit.

The unit will now complete an initialisation routine and proceed to run the CAT40 module. On power up the unit on Test will then display:

PP40 TEST MODULE

followed by the revision of the CAT40

ISSUE 01 - 00

and finally the prompt

ENTER TEST NO _ _

The CAT40 is now ready to proceed with the Testing of the unit under test.

The full list of available Tests is detailed in the maintenance section of this manual (Section 4). In this section only those Tests which perfom selftests on the mainframe circuitry will be entered.

If any failures are detected refer to the relevant section in the Maintenance section.

At the ENTER TEST prompt, Press key 2 followed by ENTER.

On entering the Selftest mode, the CAT40 module will perform a series of Tests on the programming driver circuits of the PP40. A Selftest failing will be indicated by the Test failing being displayed and one of the LEDs lighting indicating which of the BITs has failed (if applicable).

If no failures are detected, the message "Test 37 PASS" will be displayed. The test can be repeated by pressing the "0" key. The test will now cycle untill the unit is powered off or a failure is detected.

If a failure is detected refer to the maintenance section of this manual (4.0).

PRESS THE EXIT KEY.

At the ENTER TEST prompt:

Enter Test 3 and press the SET key.

This TEST enables the SELFTEST reading of the PAD lines comparators.

The display will read.....PD PAD COMPS.

The TEST will begin in cycle mode alternately displaying "00" and "FF".

Pressing the 1 key will cause the Test to cease to cycle.

The display will now read:	PD PAD COMPS 00 - 00
or:	PD PAD COMPS FF - FF

Pressing the 1 key will cause the Test to step.

The following examples are typical detected and displayed failures.

Displayed	PD PAD COMPS 00 - 01
Displayed	PD PAD COMPS FF - FE

Refer to the Section 4 of this manual if any failures are detected.

PRESS THE EXIT KEY.

Section 2.6 **Display Test**

At the ENTER TEST PROMPT,

Enter Test 70 and press the SET key.

Ensure that the character "U" is now displayed in all locations.

PRESS EXIT KEY.

Section 2.7 **Static RAM Test**

This Test when entered will write a pre-determined Test pattern to the onboard SRAM. It is then read back and confirmed.

Enter Test 71 and press the SET key

If no failures are detected it will result in the following display.

SRAM TEST PASS

If a failure is detected refer to the relevant section of the Maintenance Section (4).

PRESS THE EXIT KEY.

If the unit under Test is a PP40 programmer proceed to Section 2.12 of this procedure.

Section 2.8 **Display Dynamic RAM Size**

This Test will only apply to models PP41, PP42 and ZL33.

The Test will allow the size of the RAM extension fitted to any of the above units to be detected and displayed.

Enter Test 80 and press the SET key.

After a short delay, the size of the RAM fitted will be displayed in HEX.

0000 Displayed = No RAM fitted.

010000 Displayed = RAM size 512K

020000 Displayed = RAM size 1024K

040000 Displayed = RAM size 2048K

080000 Displayed = RAM size 4096k

Ensure that the correct size of RAM is displayed for what should be fitted to the programmer.

PRESS THE EXIT KEY.

Section 2.9 **Dynamic RAM Test**

This Test when entered will write a series of pre-determined Test patterns to the onboard DRAM. It is then read back and confirmed.

Enter Test 81 and press the SET key

The Test will now proceed to Test the DRAM. A PASS message will be displayed if no errors are detected. If a failure is detected and displayed, refer to relevant section of the Maintenance Section (4).

PRESS THE EXIT KEY.

Section 2.10 **Test RS232 Ports**

The following Tests only apply to models PP41, PP42 AND ZL33 as they allow the twin RS232 ports to be functionally tested.

The Tests require a connection cable to link between the RS232 ports.

Section 2.11 **RS232 Ports 1 and 2 Seltests.**

This Test will require the RS232 ports to be connected together. The connections are as follows.

Port 1		Port 2
Pin 2	connect to	Pin 2
Pin 3	connect to	Pin 3
Pin 7	connect to	Pin 7

With the connections in place.

Enter Test 90 and press the SET key.

The Test will now proceed to test the RS232 ports. A PASS message will be displayed if no errors are detected. If a failure is detected and displayed refer to relevant section of the Maintenance Section (4).

PRESS THE EXIT KEY.

Section 2.12 **Check Operation of ZIF (Zero Insertion Force) Sockets**

All of the ZIF sockets should be visually inspected to confirm that they open and close freely.

This is same test performed in section 2.4

Using Test devices containing suitable Test patterns relevant to the module under test, confirm that the Master socket can Read the device(s) correctly.

For models type PP41, PP42, ZL33 the device used to confirm the ability of the Master socket to read devices correctly can also be used to confirm the ability of the Slave sockets to read devices correctly. Once the device has been loaded into RAM confirm that each slave socket can verify the device correctly.

In the case of the PP40, two devices each containing the same suitable test pattern and relevant to the module under test are required. With one device in the Master socket ensure that each Slave socket in turn can verify the second device correctly.

Section 3 Calibration Procedure

This procedure applies to models PP40, PP41, PP42 and ZL33 programmers.

The Programmers can be put into a Calibration mode via the keyboard entering routines located within the mainframe PROM.

Equipment Requirements.

1. DMM in Calibration
2. Adjustment Tool

3.1 Disconnect supply to the Programmer and remove the module.

3.2 Remove the five cross-headed screws that secure the cover moulding to the metal base. Two of these screws are located at the top corners of the rear metalwork panel and three at the extreme front of the metal base.

3.3 Lift the cover moulding away from the base.

If applicable remove the Twin ribbon cables connecting the RS232 connectors to the RS232/RAM PCB.

Access will be required at first to the keyboard to gain entry to the calibration mode.

3.4 Re-connect the supply to the programmer and power on.

The unit will display "MODULE ?".

3.5 Press the "SET" key followed by the "E" and "4" keys.

The unit will now display "CAL. VCL ALL"

3.6 Connect the Negative lead of the DMM to the Ground connection located on the metal base next to the ON/OFF switch.

3.7 Monitor the following Test points and adjust as required.

ISSUE 1 PCBs ONLY

Test Point	Voltage Range	Adjust.
R128 (6K8) square pad end	12.5V ± 0.1V	VR1
R125 (6K8) square pad end	12.5V ± 0.1V	VR2
R133 (6K8) square pad end	12.5V ± 0.1V	VR3
R135 (6K8) square pad end	6.5V ± 0.1V	VR4

ISSUE 2 and LATER PCBs

Monitor	Reference	Voltage Range	Adjust.
R120 (6K8)	square pad end	12.5V ± 0.1V	VR1
R125 (6K8)	square pad end	12.5V ± 0.1V	VR2
R131 (6K8)	square pad end	12.5V ± 0.1V	VR3
R138 (6K8)	square pad end	6.5V ± 0.1V	VR4

Confirm outputs of PSU

The PP40 series PSU is factory preset and no adjustment is available. Should any supplies be out of tolerance, the PSU should be replaced.

	Voltage Range		
TP1 (Blue cable)	+5.0V	to	+5.2V
TP2 (Blue cable)	+5.0V	to	+5.2V
TP3 (Yellow cable)	0V		
TP4 (Yellow cable)	0V		
TP5 (Green cable)	+19.0V to		+23.0V
TP6 (Brown cable)	+28.0V to		+33.0V
TP7 (Yellow cable)	0V		
TP8 (Black cable)	-11.70V	to	-12.30V
TP9	0V		
TP10 (Orange cable)			
TP11 (Red cable)			

The calibration of the unit is now complete.

Power off and re-assemble ensuring that if applicable the RS232 ribbon cable connections are re-fitted.

Section 4 Maintenance Procedure

This section of the manual comprises a complete Test procedure for the PP40 series programmers. It can be used for fault detection on a failed unit or for the thorough testing of a unit prior to delivery to a customer.

For the part of the procedure concerning the PP40 series mainframes (PP40, PP41, PP42, ZL33) the use of the Test module type CAT40 is required. The module is fitted in place of the programmer's programming module. The CAT40 module contains Test routines entered via the keyboard.

The following procedure details each of these routines in depth and where possible provides a solution for the detected failure.

Section 4.1 PP40 Series Programmers

Test equipment required.

1. Oscilloscope eg, Tektronic 2445
2. DMM eg, Data Precision 2480R
3. RS232 Port 1 to Port 2 connector.
4. CAT40 Test module.

Section 4.2 Procedure

Ensure the programmer is powered off and insert the CAT40 module.
Power on the unit.

The unit will now complete an initialisation routine and proceed to run the CAT40 module. On power up the unit on Test will then display:

PP40 TEST MODULE

followed by the revision of the CAT40

ISSUE 01 - 00

and finally the prompt

ENTER TEST NO _ _

The CAT40 is now ready to proceed with the Testing of the unit under test.

Section 4.3 Test mode 01...CALIBRATE.

Section 4.4 Test mode 02...SELFTEST.

At the ENTER TEST PROMPT, Press key 2 followed by ENTER.

On entering the Selftest mode, the CAT40 module will perform a series of Tests on the programming driver circuits of the PP40. A Selftest failing will be indicated by the Test failing being displayed and one of the LEDs lighting indicating which of the BITs has failed (if applicable).

If a Test failure is detected and displayed, the next Test failing (if applicable) can be displayed by pressing the 1 key. Repeated pressing of the 1 key will result in the displaying of each Test failing. This feature will be of assistance in fault diagnosis.

Details of the circuit failing are included in each of the following descriptions of the SELFTEST displayed failures. In addition how to proceed with fault diagnosis is detailed.

On completion of the selftest, press the "0" key to cycle the test.

Section 4.4.1 **Selftest failure 1.....LATCH TEST**

For this Test a "walking 1" is written to the LED latch and then read back via "LOOPEN". This Tests for the ability for the mainframe to write to, and read back from the module. A failure in this Test will result in any BITS failing being displayed in HEX.

Section 4.4.2 **Selftest failure 2.....STATIC RAM TEST.(1)**

For this Test a pattern is written to the static RAM and read back.

A failure in this Test will result in the BITS failing being displayed in HEX.

Section 4.4.3 **Selftest failure 3.....STATIC RAM TEST.(2)**

For this Test a pattern is written to the static RAM as double Bytes using 16 Bit registers and then read back as single Bytes.

A failure in this Test will result in the BITS failing being displayed in HEX.

Section 4.4.4 **Selftest failure 4.....STATIC RAM TEST.(3)**

For this Test a pattern is written to the Static RAM as single Bytes and then read back as double Bytes.

A failure in this Test will result in the BITS failing being displayed in HEX.

Section 4.4.5 **Selftest failure 5.....MAINFRAME EPROM CHECKSUM TEST.**

The mainframe EPROM is checksummed and the result is then compared with the value stored in the first 2 Bytes of the mainframe EPROM.

Section 4.4.6 **Selftest failure 6.....MODULE EPROM CHECKSUM TEST.**

The module EPROM is checksummed and the result is then compared with the value stored in the first 2 Bytes of the module EPROM.

Section 4.4.7 **Selftest failure 7.....CLAMP CALIBRATION TEST.**

For this Test the calibration of the four programmable Clamps is checked in the following way:

A precision 10v regulater is located on the Test module.

Clamp PVCC is first set to 9.9v and then to 10.1v to be compared with the precision 10v supply for first having been "less than" and then for having been "greater than".

Clamps 1, 2 and 3 are first set to 9.8v and then to 10.2v to be compared with the precision 10v supply for first having been "less than" and then for having been "greater than"

A failure in this Test will result in the Clamp or clamps failing being displayed.

Section 4.4.8 **Selftest failure 8.....MODULE EPROM OVERLAY LINES (OLY) TEST.**

For this Test a "walking 1" is written to the Overlay lines and read back.

A failure in this Test will result in any failing lines being displayed in HEX.

Section 4.4.9 **Selftest failure 9.....LED LATCH AND LOOPEN TEST (2)**

For this Test a Bit pattern of "AA 55" is written to the LED latch and read back via "LOOPEN".

A failure in this Test will result in any Bits failing being displayed in HEX.

Section 4.4.10 **Selftest failure 10....PAD,LC AND HC LINES PULLDOWN TEST.**

For this Test all of the pull up circuitry is disabled.

The 10K and then the 100K pulldown resistors are turned on, all lines are checked for being below 2v.

A failure in this Test will result in one or more of the LEDs on the Test module lighting.

Example:

	100K pull-downs	10K pull-downs
PADL line failure.	Bit 0	Bit 4
PADH line failure.	Bit 1	Bit 5
LC line failure.	Bit 2	Bit 6
HC line failure.	Bit 3	Bit 7

LED 1 = BIT 0
LED 2 = BIT 1
LED 3 = BIT 2
LED 4 = BIT 3
LED 5 = BIT 4
LED 6 = BIT 5
LED 7 = BIT 6
LED 8 = BIT 7

A displayed failure in this Test is only an indication that a failure has been detected. Use key 1 to step on to the next selftest failure.

Section 4.4.11 **Selftest failure 11....PADL TEST (1)**

For this Test the 1K pull-ups and the 10K pull-down resistors are turned on and all lines are checked for being high.

The Test is then repeated using the 10K pull-ups and the 100K pull-down resistors and all lines are checked for being high.

A failure in this Test will result in the pull-ups which have failed being displayed and one or more of the LEDs lighting indicating which bit has failed.

Section 4.4.12 **Selftest failure 12....PADL TEST (2)**

For this Test the 10K pull-ups and the 10k pull-down resistors are turned on and all lines are checked against a reference voltage for pull-down resistors which have failed to pull low enough.

The Test is then repeated using the 10K pull-ups and the 100K pull-down resistors.

A failure in this Test will result in the pull-down resistors which have been detected as having low resistance being displayed and one or more of the LEDs lighting indicating which Bit has failed.

Section 4.4.13 **Selftest failure 13....PADL HAMMER DRIVER TEST.**

For this Test the 1K pull-up resistors are turned on and a Bit pattern is written to the pull-down drivers (Hammer drivers) to test for the ability to drive the lines low.

A failure in this test will result in the Bit or Bits failing being displayed in HEX and one or more LEDs lighting to indicate the failure in binary.

Section 4.4.14 **Selftest failure 14....PADH HAMMER DRIVER TEST.**

For this Test the 1K pull-up resistors and all the pull-down drivers (Hammer drivers) are turned on to Test for the ability for all lines to be pulled low.

The Test is then repeated using the 10K pull-up resistors.

A failure in this Test will result in the pull-up or pull-ups which have failed, being displayed and one or more LEDs lighting indicating which Bit has failed.

This Test will detect a faulty "Hammer driver", i.e: a driver which has failed to pull low.

Section 4.4.15 **Selftest failure 15....PADH TEST.**

For this Test the 10K pull-ups and the 10K pull-down resistors are turned on and all lines are checked against a reference voltage for pull-down resistors which fail to pull low enough.

This Test is then repeated using the 10k pull-ups and the 100K pull-down resistors.

A failure in this Test will result in the pull-down resistors which have been detected as having low resistance being displayed and one or more of the LEDs lighting indicating which BIT has failed.

Section 4.16 **Selftest failure 16....PADH HAMMER DRIVER TEST (2)**

For this Test the 1K pull-up resistors are turned on and a BIT pattern is written to the Hammer drivers. This will check for PADH lines which may be shorted together.

A failure in this Test will result in the BITS failing being displayed in HEX and one or more of the LEDs lighting indicating the failure in binary format.

Section 4.4.17 **Selftest failure 17....LC HAMMER DRIVER TEST.**

For this Test the 1K pull-up resistors and the LC Hammer Drivers are turned on to check that all lines can be pulled high and low.

The Test is repeated using the 10K pull-up resistors.

A failure in this Test will result in whichever pull-up failed being displayed and one or more of the LEDs lighting indicating the BITS which have failed.

Section 4.4.18 **Selftest failure 18....LC TEST.**

For this Test the 10K pull-ups and the 10K pull-down resistors are turned on and all lines are checked against a reference voltage for pull-down resistors which have failed to pull low enough.

This Test is then repeated using the 10K pull-up and 100K pull-down resistors.

A failure in this Test will result in the pull-down resistors which have been detected as having low resistance being displayed and one or more of the LEDs lighting indicating which BIT has failed.

Section 4.4.19 **Selftest failure 19....LC HAMMER DRIVER TEST (2)**

For this Test the 1K pull-up resistors are turned on and a BIT pattern is written to the LC Hammer Drivers. This will check for PADH lines which may be shorted together.

A failure in this Test will result in the BITS failing being displayed in HEX and one or more of the LEDs lighting indicating the failure in Binary format.

Section 4.4.20 **Selftest failure 20....HC HAMMER DRIVERS.**

For this Test the 1K pull-up resistors and the LC Hammer Drivers are turned on to check that all lines can be pulled high and low.

The Test is repeated using the 10K pull-up resistors.

A failure in this Test will result in the failing pull-up being displayed and one or more of the LEDs lighting indicating the BITS which have failed.

Section 4.4.21 **Selftest failure 21....HC TEST.**

For this Test the 10K pull-ups and the 10K pull-down resistors are turned on and all lines are checked against a reference voltage for pull-down resistors which fail to pull low enough.

The test is then repeated using the 10K pull-ups and the 100K pull-down resistors.

A failure in this Test will result in the pull-down resistors which have been detected as having low resistance being displayed and one or more of the LEDS lighting indicating which BIT has failed.

Section 4.4.22 **Selftest failure 22....HC HAMMER DRIVERS (2)**

For this Test the 1K pull-up resistors are turned on and a BIT pattern is written to the LC Hammer Drivers. This will check for PADH lines that may be shorted together.

A failure in this Test will result in the BITS failing being displayed in HEX and one or more of the LEDs lighting indicating the failure in binary format.

Section 4.4.23 **Selftest failure 23....TTL DRIVER TEST.**

For this Test the 100R pull-down resistors are turned on, the TTL drivers are then "walked" and read back to check that none of them are shorted together. The Test will also check the ability for the TTL drivers to hold a valid logic level against the pull-down resistors.

A failure in this Test will result in the BITS failing being displayed in HEX and one or more of the LEDs lighting indicating the failure in Binary format.

Section 4.4.24 **Selftest failure 24....TTL DRIVER TEST (2)**

For this Test no pull-down resistors are turned on, the TTL drivers are "walked" to check that each driver can provide a logic low without the aid of pull-down resistors.

A failure in this Test will result in the BITS failing being displayed in HEX and one or more of the LEDs lighting indicating the failure in Binary format.

Section 4.4.25 **Selftest failure 25....OC DRIVER TEST.**

For this Test the 470R pull-up resistors are turned on, the OC drivers are then "walked" to check that none of the lines are shorted together and that the drivers operate correctly with the 470R pull-ups.

A failure in this Test will result in the BITS failing being displayed in HEX and one or more of the LEDs lighting indicating the failure in Binary format.

Section 4.4.26 **Selftest failure 26....OC DRIVER TEST (2).**

For this Test the 47R pull-up resistors are turned on, the OC drivers are then "walked" to check that none of the lines are shorted together and that the drivers operate correctly with the 47R pull-ups.

A failure in this Test will result in the BITS failing being displayed in HEX and one or more of the LEDs lighting indicating the failure in Binary format.

Section 4.4.27 **Selftest failure 27....HC HAMMER DRIVERS CURRENT SINK TEST.**

For this Test the 120mA current sources are turned on, a clamp is used to provide a set voltage and then the HC Hammer Drivers are turned on.

This checks that the drivers have the ability to pull the voltage low.

A failure in this Test will result in the BITS failing being displayed in HEX and one or more of the LEDs lighting indicating the failure in Binary format.

Section 4.4.28 **Selftest failure 28....LC HAMMER DRIVERS CURRENT SINK TEST.**

For this Test the 90mA current sources are turned on, a clamp is used to provide a set voltage and then the LC Hammer Drivers are turned on. This checks that the drivers have the ability to pull the voltage low.

A failure in this Test will result in the BITS failing being displayed in HEX and one or more of the LEDs lighting indicating the failure in Binary format.

Section 4.4.29 **Selftest failure 29....NOT USED.**

Section 4.4.30 **Selftest failure 30....NOT USED.**

Selftests 31 to 37 ....CURRENT SOURCE CHECKS.

In these Tests the current sources are turned on, the current is then passed through the 1% resistors located on the CAT module and the resulting voltage is checked for being within a tolerance window.

A failure in one of these Tests will result in the Test failing being displayed with the BIT failing to provide enough current in HEX or the BIT providing excess current being indicated by one or more of the LEDs lighting.

Section 4.4.31 **Selftest failure 31....30mA LC sources BITS 0-7**

This Test applies to the LOW current sources LC0 to LC7.

Section 4.4.32 **Selftest failure 32....60mA LC sources BITS 0-7**

This Test applies to the LOW current sources LCO to LC7.

Section 4.4.33 **Selftest failure 33....90mA LC sources BITS 0-7**

This Test applies to the LOW current sources LC0 to LC7.

Section 4.4.34 **Selftest failure 34....120mA HC sources BITS 0-3**

This Test applies to the HIGH current sources HC0 th HC3.

Section 4.4.35 **Selftest failure 35....120mA HC sources BITS 4-7**

This Test applies to the high current sources HC4 to HC7.

Section 4.4.36 **Selftest failure 36....60mA HC sources BITS 0-3**

This Test applies to the high current sources HC0 to HC3.

Section 4.4.37 **Selftest failure 37....240mA HC sources BITS 4-7**

This Test applies to the high current sources HC4 to HC7.

PRESS EXIT key to exit from TEST or alternatively power off the unit.

Section 4.5 **Test Mode 03.....TEST PAD read comparators.**

This TEST enables the SELFTEST reading of the PAD lines comparators.

The TEST alternatively uses the 1K pull-up resistors and the 10K pull-down resistors to TEST the PAD lines comparators.

To enter the TEST, PRESS the "3" key.

The display will read.....PD PAD COMPS.

The TEST will begin in cycle mode alternatively displaying "00" and "FF".

Pressing the 1 key will cause the Test to cease to cycle.

The display will now read..... PD PAD COMPS 00 - 00

or ..... PD PAD COMPS FF - FF

Pressing the 1 key will cause the Test to step.

The following examples are typical detected and displayed failures.

Displayed ..... PD PAD COMPS 00 - 01

This failure indicates that PADL 0 is being read back as being HIGH.

Displayed ..... PD PAD COMPS FF - FE

This failure indicates that PADL 0 is being read back as being LOW.

PRESS THE EXIT KEY.

The following Tests, 04 through to 63 are not Selftests but require the engineer to either observe a waveform or take a measurement in DC volts or DC current. These Tests should be used to aid fault diagnostic when a Selftest failure has been detected or alternativly when it is apparent that the unit under Test is defective in a way not detected by the previous Selftests.

Section 4.6 **Observing Test Waveforms Using the CAT40 Module.**

There is a feature within the CAT40 module which will allow the engineer to preset the timing of any of the CAT40 test waveforms. This function is entered in the following way.

Enter Test F0 and press the SET key.

Display should now read: DELAY 0064 X 10us.

Select instead DELAY 0010 X 10us

PRESS THE EXIT KEY.

The majority of waveforms in this maintenance procedure should be observed with this delay set. The exceptions are the slew rate diagrams for VCC and VC3. For these, the delay should be 0030 X 10us

Section 4.7 **Pull Up / Pull Down Resistor Test 1**

This Test alternately turns on and off the 1K pull up resistor and the 10K pull down resistors. These resistors are located on diagram 110-0030

Enter Test 04 and press the SET key.

The Test will now be in cycle mode.

Using an oscilloscope, observe the PA0 to PA15 test points on the CAT40 module.

Expected waveform:

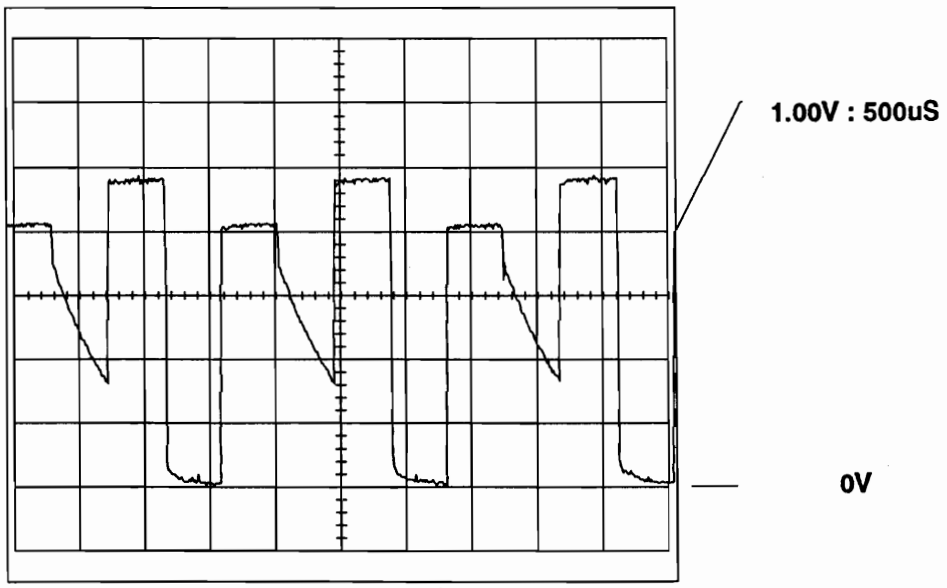

PRESS THE EXIT KEY.

Section 4.8 **Pull Up / Pull Down Resistor Test 2.**

This Test alternately turns on and off the 10K pull up resistor and the 100K pull down resistors. These resistors are located on diagram 110-0030 sheet ? of 5.
Enter Test 05 and press the SET key.
The Test will now be in cycle mode.
Using an oscilloscope observe the PA0 to PA15 test points on the CAT40 module.
Expected waveform:

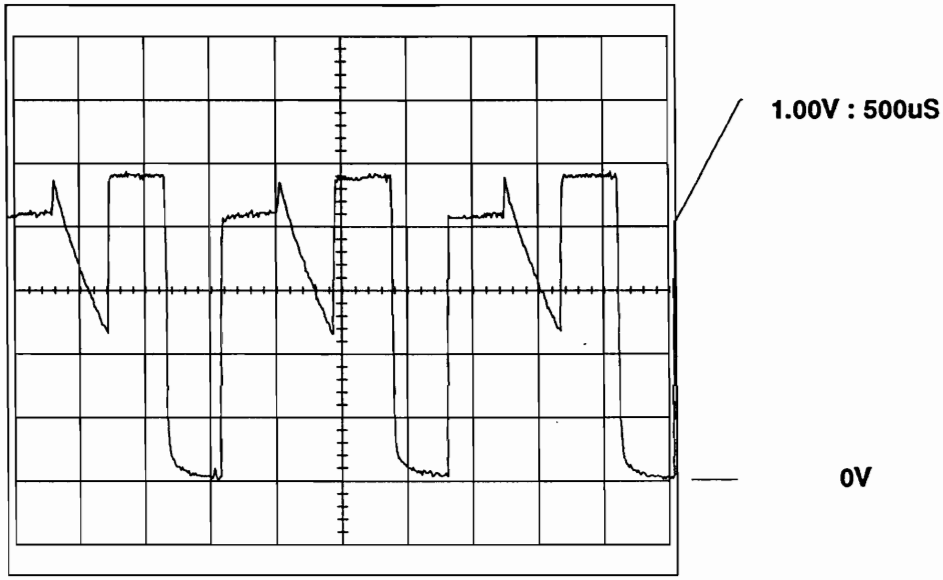

PRESS THE EXIT KEY.

Section 4.9 **Address Line Test 1 (PAD 0 to PAD 7)**

This Test will enable programmable address lines PAD 0 to PAD 7 to cycle.
Enter Test 06 and press the SET key.
The Test will now be in cycle mode.
Using an oscilloscope observe the PA0 to PA7 test points on the CAT40 module.
Expected waveform:

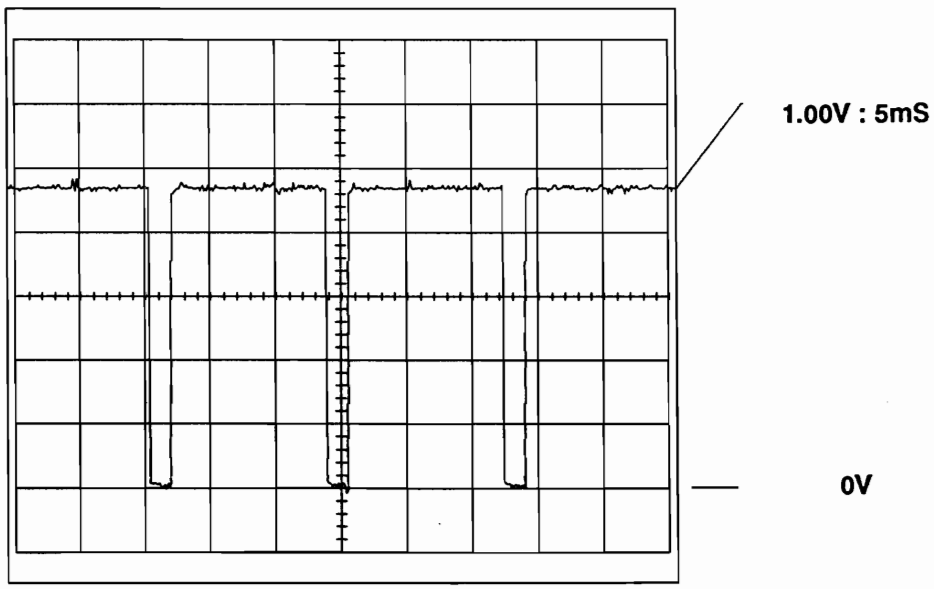

PRESS THE EXIT KEY.

Section 4.10 **Address Line Test 2 (PAD 8 to PAD 15)**

This Test will enable programmable address lines PAD 8 to PAD 15 to be cycled on and off. Enter Test 07 and press the SET key.
The Test will now be in cycle mode.
Using an oscilloscope observe the PA8 to PA15 test points on the CAT40 module.
Expected waveform:

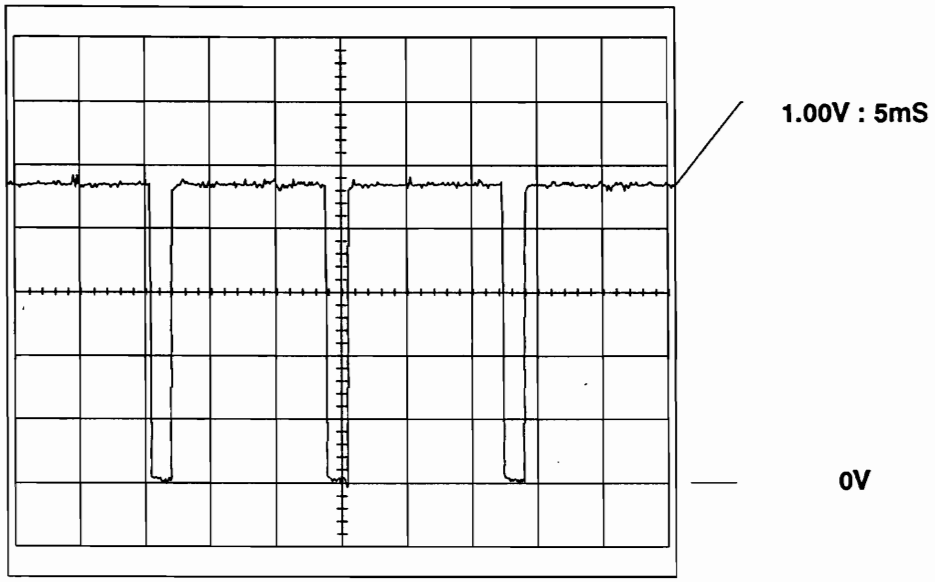

PRESS THE EXIT KEY.

Section 4.11 **Pull Down Test 1 (PDL 0 to PDL 7)**

This Test will enable the PULL DOWN (ground) drivers PDL 0-7 for the LOW current sources to be cycled on and off.
Enter Test 08 and press the SET key.
The Test will now be in cycle mode.
Using an oscilloscope observe LC0 to LC7 test points on the the CAT40 module.
Expected waveform:

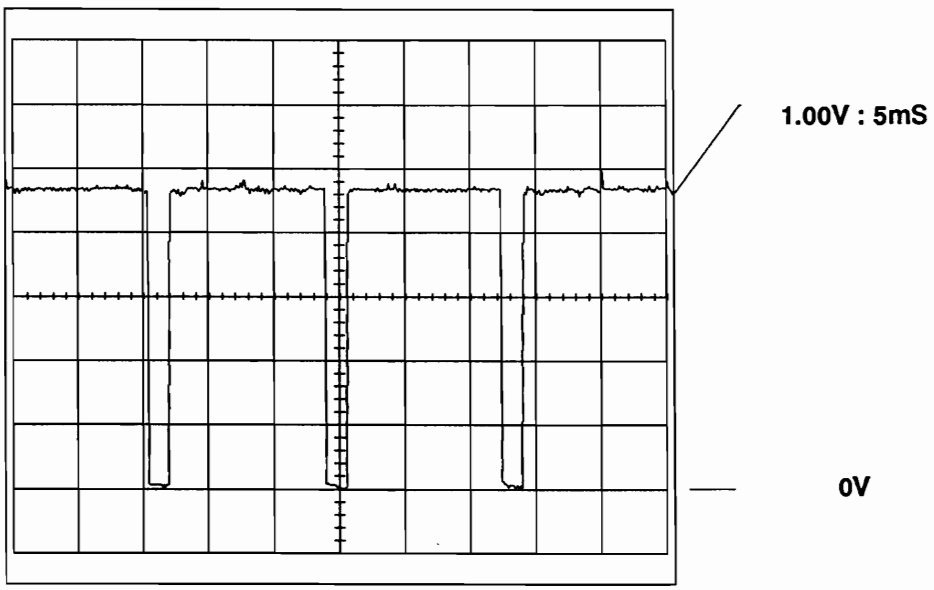

PRESS THE EXIT KEY.

Section 4.12 **Pull Down Test 2 (PDH 0 to PDH 7)**

This Test will enable the PULL DOWN (ground) drivers PDH 0-7 for the HIGH current sources to be cycled on and off. Enter Test 09 and press the SET key. The Test will now be in cycle mode.
Using an oscilloscope observe HC0 to HC7 test points on the the CAT40 module.
Expected waveform:

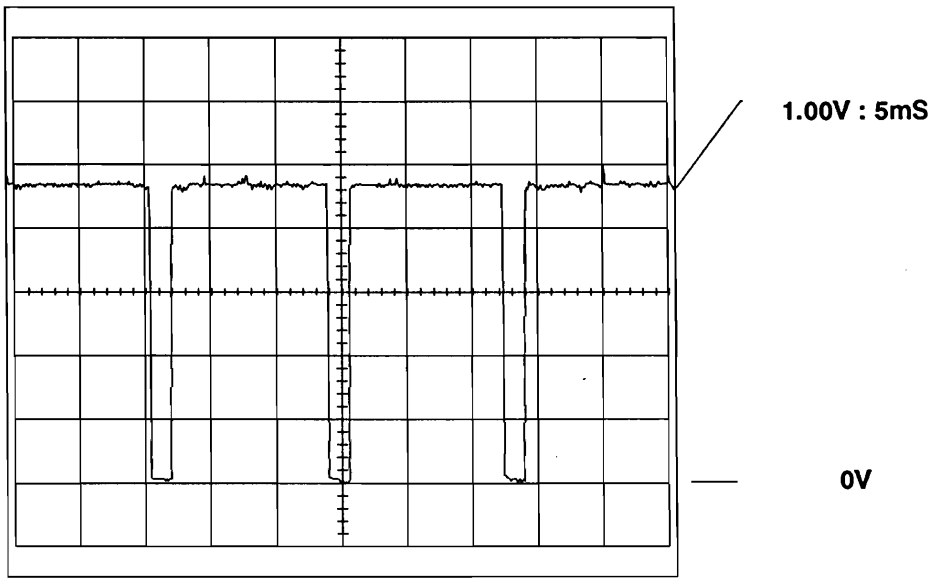

PRESS THE EXIT KEY.

Section 4.13 **30mA Low Current Source Off Load**

This Test will allow the 30mA LOW CURRENT drivers LC0 to LC7 to be cycled on and off. Enter Test 10 and press the SET key. The Test will now be in cycle mode.
Using an oscilloscope observe LC0 to LC7 test points on the the CAT40 module.
Expected waveform:

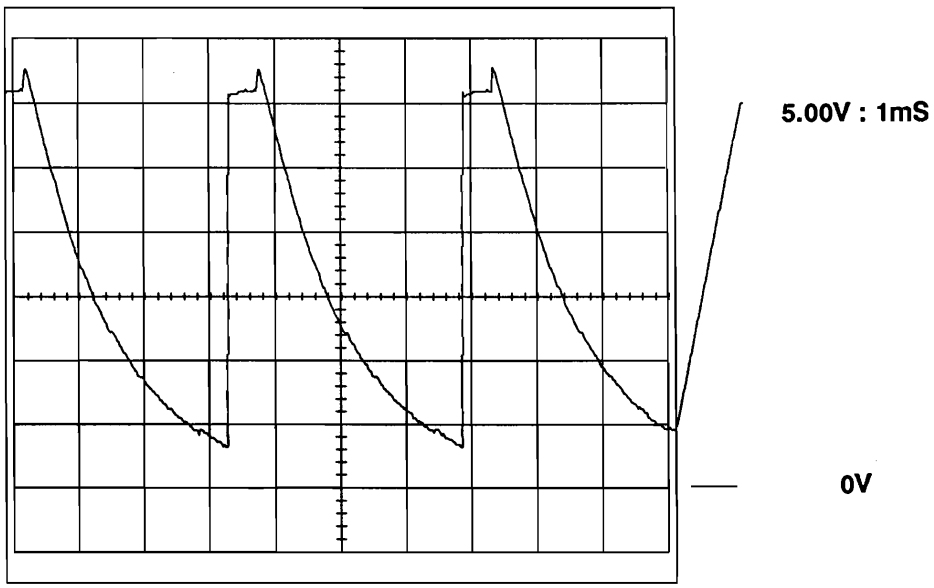

PRESS THE EXIT KEY.

Section 4.14 **30mA Low Current Source On Load**

The capability of the current drivers to source current can be checked in the following way.

Enter Test 10 and press the SET key.

The Test will now be in cycle mode.

PRESS THE 1 KEY.

The Test will now cease to cycle and allow each current source to be turned on individually to confirm the ability to source the correct amount of current.

Each current source is turned on and off individually by pressing the "1" key.

Using a DMM set to read current, monitor the following test points and ensure they conform to the stated specification.

NOTE: The negative lead of the DMM should be connected to ground via the 47R resistor located at Test point 47R on the CAT40 module.

Displayed	Test Point	Current Range
LCL 0 DRIVE 30mA	LC0	23mA to 28mA
LCL 1 DRIVE 30mA	LC1	23mA to 28mA
LCL 2 DRIVE 30mA	LC2	23mA to 28mA
LCL 3 DRIVE 30mA	LC3	23mA to 28mA
LCL 4 DRIVE 30mA	LC4	23mA to 28mA
LCL 5 DRIVE 30mA	LC5	23mA to 28mA
LCL 6 DRIVE 30mA	LC6	23mA to 28mA
LCL 7 DRIVE 30mA	LC7	23mA to 28mA

SECTION 4.15 **60mA Low Current Source Off Load**

This Test will allow the 60mA LOW CURRENT drivers LC0 to LC7 to be cycled on and off. Enter Test 11 and press the SET key. The Test will now be in cycle mode. Using an oscilloscope observe LC0 to LC7 test points on the the CAT40 module. Expected waveform:

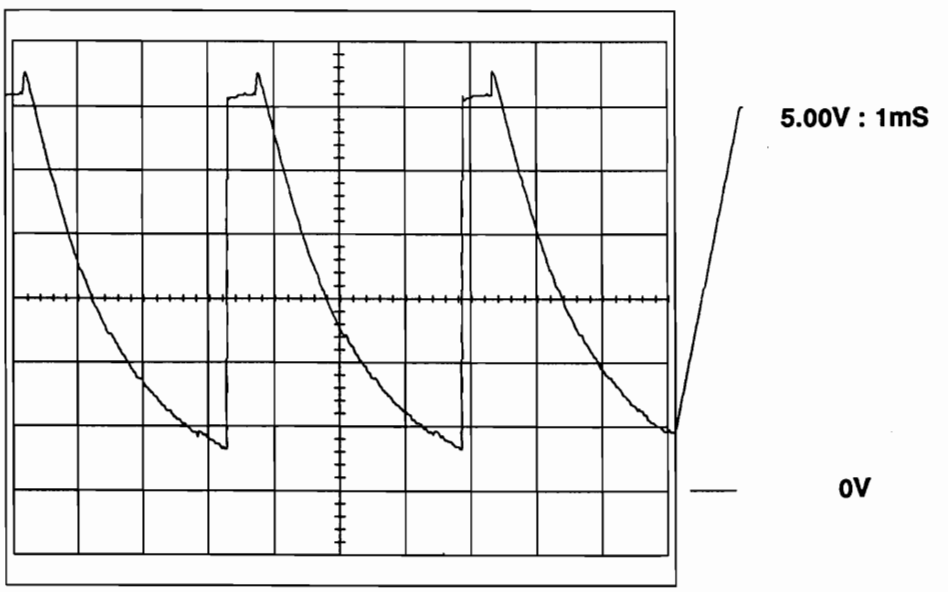

PRESS THE EXIT KEY.

Section 4.17 **60mA Low Current Source On Load**

The capability of the current drivers to source current can be checked in the following way. Enter Test 11 and press the SET key.
The Test will now be in cycle mode. PRESS THE 1 KEY.
The Test will now cease to cycle and allow each current source to be turned on individually to confirm the ability to source the correct amount of current.
Each current source is turned on and off individually by pressing the "1" key.
Using a DMM set to read current monitor the following test points and ensure they conform to the stated specification.
NOTE: The negative lead of the DMM should be connected to ground via the 47R resistor located at Test point 47R on the CAT40 module.

Displayed	Test Point	Current Range
LCL 0 DRIVE 60mA	LC0	49mA to 59mA
LCL 1 DRIVE 60mA	LC1	49mA to 59mA
LCL 2 DRIVE 60mA	LC2	49mA to 59mA
LCL 3 DRIVE 60mA	LC3	49mA to 59mA
LCL 4 DRIVE 60mA	LC4	49mA to 59mA
LCL 5 DRIVE 60mA	LC5	49mA to 59mA
LCL 6 DRIVE 60mA	LC6	49mA to 59mA
LCL 7 DRIVE 60mA	LC7	49mA to 59mA

Section 4.18 **60mA Medium Current Sources Off Load**

This Test will allow the 60mA MEDIUM CURRENT drivers MCL0 to MCL3 to be cycled on and off. Enter Test 12 and press the SET key.
The Test will now be in cycle mode.
Using an oscilloscope observe MCL0 to MCL3 test points on the CAT40 module.
Expected waveform:

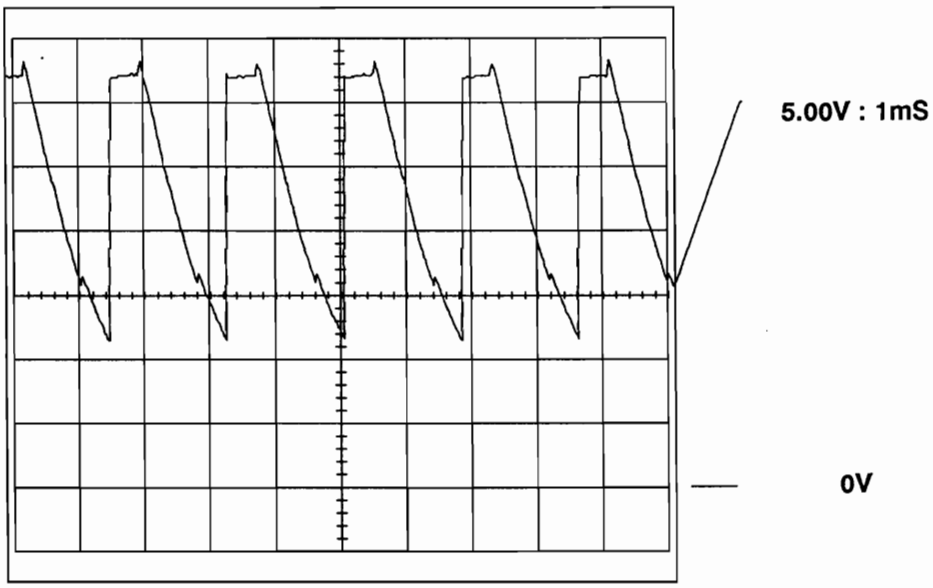

PRESS EXIT KEY.

Section 4.19 **60mA Medium Current Source On Load**

The capability of the current drivers to source current can be checked in the following way. Enter Test 12 and press the SET key.
The Test will now be in cycle mode. PRESS THE 1 KEY.
The Test will now cease to cycle and allow each current source to be turned on individually to confirm the ability to source the correct amount of current.
Each current source is turned on and off individually by pressing the "1" key.
Using a DMM set to read current monitor the following test points and ensure they conform to the stated specification.
NOTE: The negative lead of the DMM should be connected to ground via the 47R resistor located at Test point 47R on the CAT40 module.

Displayed	Test Point	Current Range
MCL 0 DRIVE 60mA	HC0	49mA to 59mA
MCL 1 DRIVE 60mA	HC1	49mA to 59mA
MCL 2 DRIVE 60mA	HC2	49mA to 59mA
MCL 3 DRIVE 60mA	HC3	49mA to 59mA

Section 4.20 **120mA Medium Current Sources Off Load**

This Test will allow the 120mA MEDIUM CURRENT drivers MCL0 to MCL3 to be cycled on and off. Enter Test 13 and press the SET key. The Test will now be in cycle mode.
Using an oscilloscope observe MCL0 to MCL3 test points on the CAT40 module.
Expected waveform:

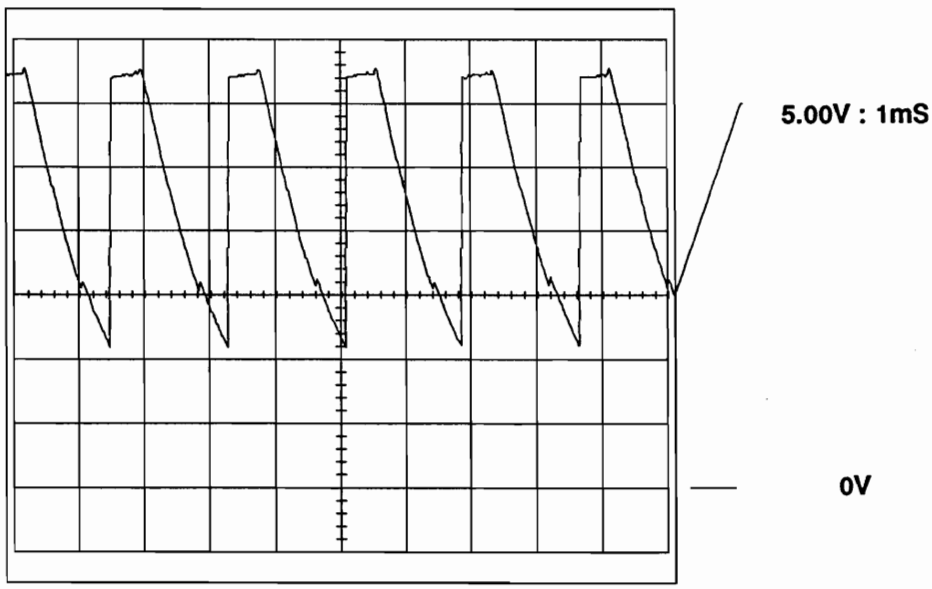

PRESS EXIT KEY.

Section 4.21 **120mA Medium Current Source On Load**

The capability of the current drivers to source current can be checked in the following way. Enter Test 13 and press the SET key.
The Test will now be in cycle mode. PRESS THE 1 KEY.
The Test will now cease to cycle and allow each current source to be turned on individually to confirm the ability to source the correct amount of current.
Each current source is turned on and off individually by pressing the "1" key.
Using a DMM set to read current, monitor the following test points and ensure they conform to the stated specification.

NOTE: The negative lead of the DMM should be connected to ground via the 47R resistor located at Test point 47R on the CAT40 module.

Displayed	Test Point	Current Range
MCH 0 DRIVE 120mA	HC0	105mA to 127mA
MCH 1 DRIVE 120mA	HC1	105mA to 127mA
MCH 2 DRIVE 120mA	HC2	105mA to 127mA
MCH 3 DRIVE 120mA	HC3	105mA to 127mA

Section 4.22 **120mA High Current Sources Off Load**

This Test will allow the 120mA HIGH CURRENT drivers HCL4 to HCL7 to be cycled on and off. Enter Test 14 and press the SET key.
The Test will now be in cycle mode.
Using an oscilloscope, observe HC4 to HC7 test points on the CAT40 module.

Expected waveform:

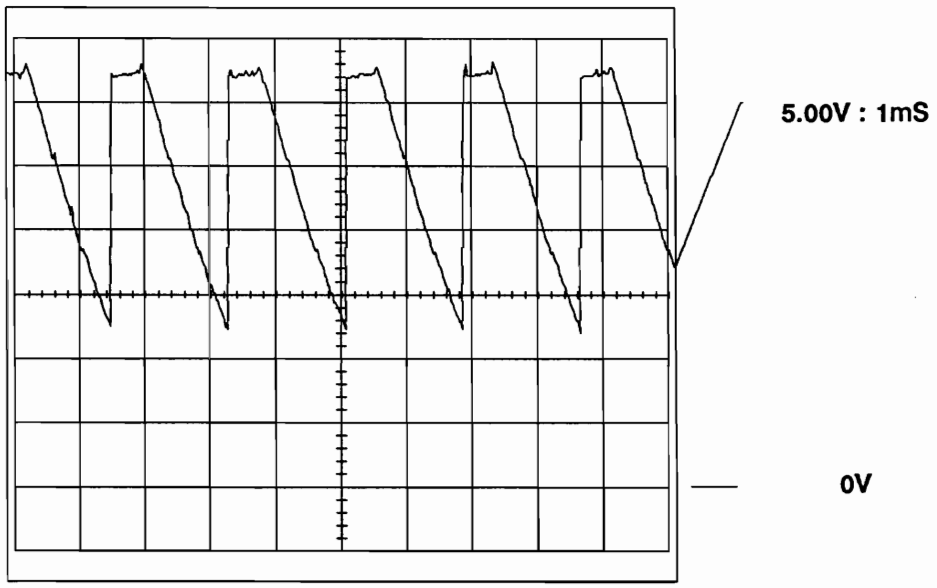

PRESS EXIT KEY.

Section 4.23 **120mA High Current Source On Load**

The capability of the current drivers to source current can be checked in the following way. Enter Test 14 and press the SET key.
The Test will now be in cycle mode. PRESS THE 1 KEY.
The Test will now cease to cycle and allow each current source to be turned on individually to confirm the ability to source the correct amount of current.
Each current source Is turned on and off individually by pressing the "1" key.
Using a DMM set to read current monitor the following test points and ensure they conform to the stated specification.
NOTE: The negative lead of the DMM should be connected to ground via the 47R resistor located at Test point 47R on the CAT40 module.

Displayed	Test Point	Current Range
HCL 4 DRIVE 120mA	HC4	105mA to 127mA
HCL 5 DRIVE 120mA	HC5	105mA to 127mA
HCL 6 DRIVE 120mA	HC6	105mA to 127mA
HCL 7 DRIVE 120mA	HC7	105mA to 127mA

Section 4.24 **240mA High Current Sources Off Load**

This Test will allow the 240mA HIGH CURRENT drivers HCH4 to HCH7 to be cycled on and off. Enter Test 15 and press the SET key.
The Test will now be in cycle mode. Using an oscilloscope observe HC4 to HC7 test points on the CAT40 module.
Expected waveform:

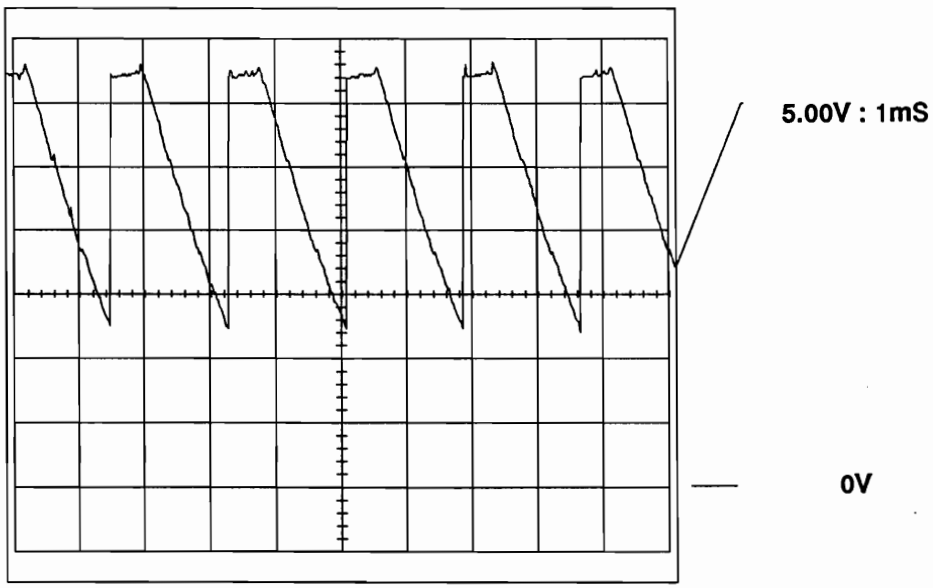

PRESS EXIT KEY

Section 4.25 **240mA High Current Source On Load**

The capability of the current drivers to source current can be checked in the following way. Enter Test 15 and press the SET key.
The Test will now be in cycle mode. PRESS THE 1 KEY.
The Test will now cease to cycle and allow each current source to be turned on individually to confirm the ability to source the correct amount of current.
Each current source is turned on and off individually by pressing the "1" key.
Using a DMM set to read current monitor the following test points and ensure they conform to the stated specification.

NOTE: The negative lead of the DMM should be connected to ground via the 47R resistor located at Test point 47R on the CAT40 module.

Displayed	Test Point	Current Range
HCH 4 DRIVE 240mA	HC4	220mA to 280mA
HCH 5 DRIVE 240mA	HC5	220mA to 280mA
HCH 6 DRIVE 240mA	HC6	220mA to 280mA
HCH 7 DRIVE 240mA	HC7	220mA to 280mA

Section 4.26 **TTL Drive Test Capability**

In this Test a walking logic "HIGH" is written to the TTL drivers TTL 0 to TTL 7.
Enter Test 16 and press the SET key.
Displayed will be "TTL DRV **"
Using an oscilloscope monitor Test points TTL0 to TTL7 on the CAT40 module and compare with following waveform..

EXPECTED WAVEFORM.

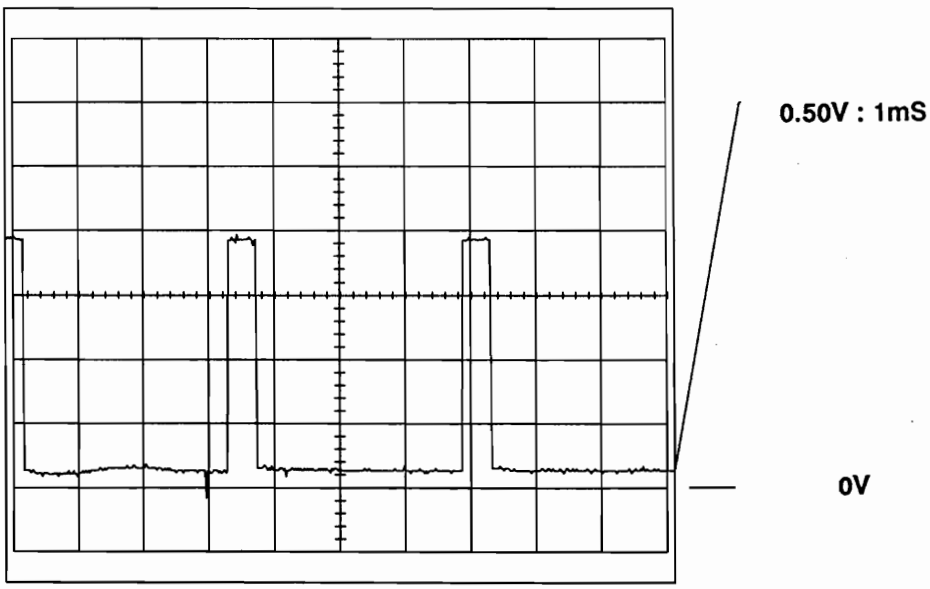

PRESS EXIT KEY.

Section 4.27 **Open Collector Drive Test Capability**

In this Test a walking logic "LOW" is written to the OC drivers OC0 to OC7.
Enter Test 17 and press the SET KEY. Displayed will be "OC DRV **"
Using an oscilloscope monitor Test points OC0 to OC7 on the CAT40 module and compare with the following waveform.

EXPECTED WAVEFORM.

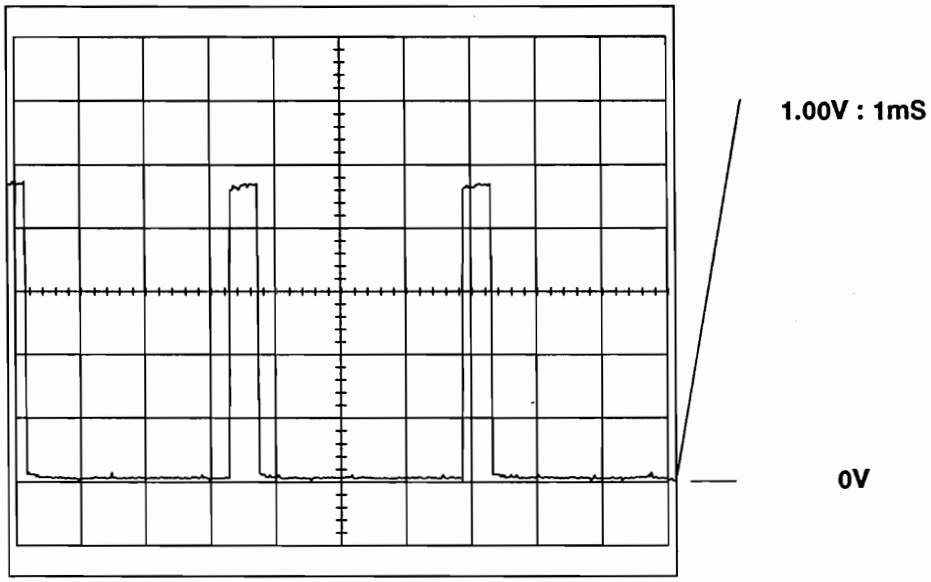

PRESS EXIT KEY

NOTE: Tests numbers 18 and 19 are not used.

Section 4.28 **PVCC Test 1 (square wave)**

In this Test, the PVCC circuitry is cycled to produce a 6.5V square wave.
Enter Test 20 and press the SET key. Displayed will be "PVCC 6.5V SQU 20"
Using an oscilloscope monitor Test point +PVCC on the CAT40 module and compare with the following waveform.

EXPECTED WAVEFORM.

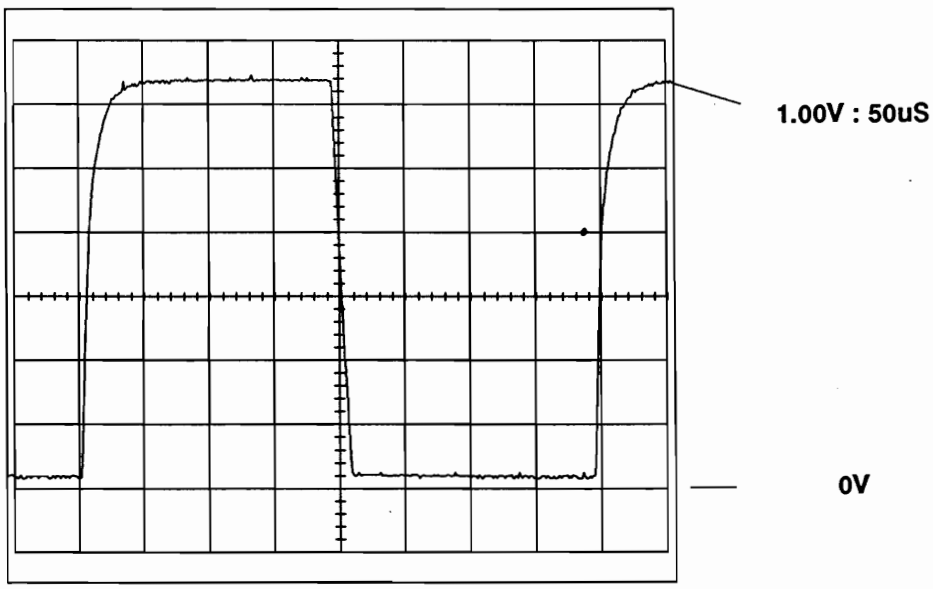

Attention should be made to ensure that the resultant waveform is "Clean" and free from any noise or spikes.

EXAMPLE OF FAILURE:

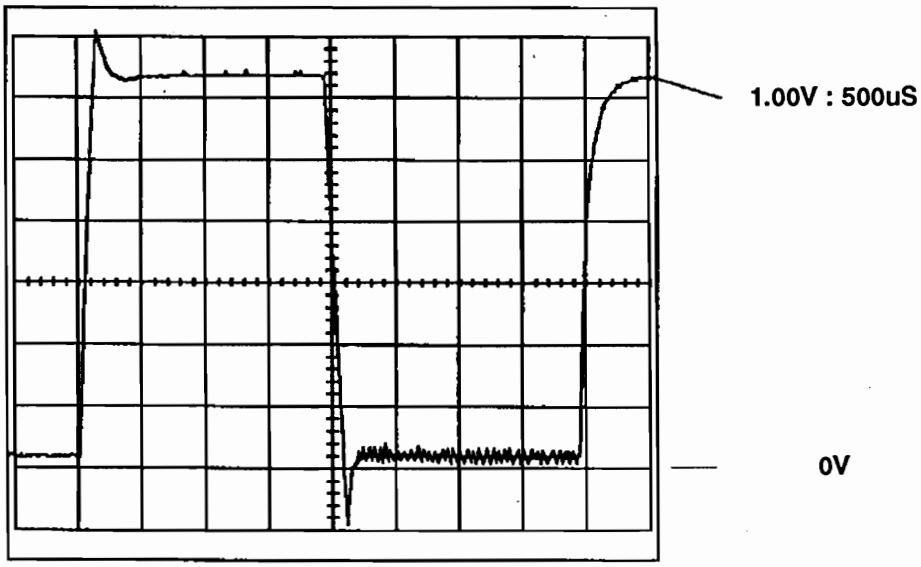

Section 4.28.1 **PVCC Test 2 (ramp)**

In this Test, every HEX value from "00" to "FF" is written to the PVCC DAC (Digital to Analogue Convertor) to produce a resultant linear saw-tooth waveform.
Each step or BIT equal to 0.05V will be displayed. Enter Test 21 and press the SET key. Displayed will be "PVCC RAMP 21"
Using an oscilloscope monitor Test point +PVCC on the CAT40 module and compare with the following waveform.

EXPECTED WAVEFORM.

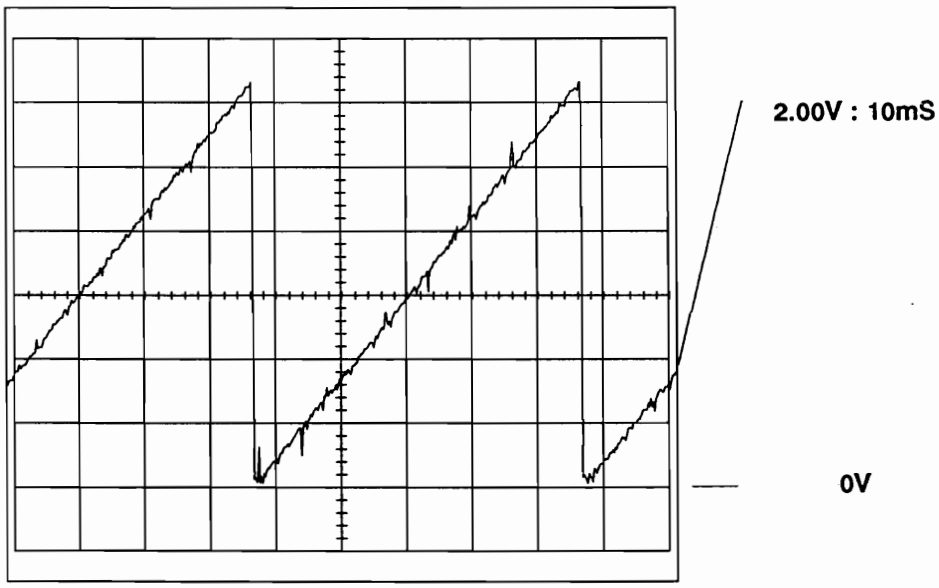

Attention should be made to ensure that the resultant waveform is "Clean" and free from any noise or spikes and that no steps should be missing..

EXAMPLE OF FAILURE:

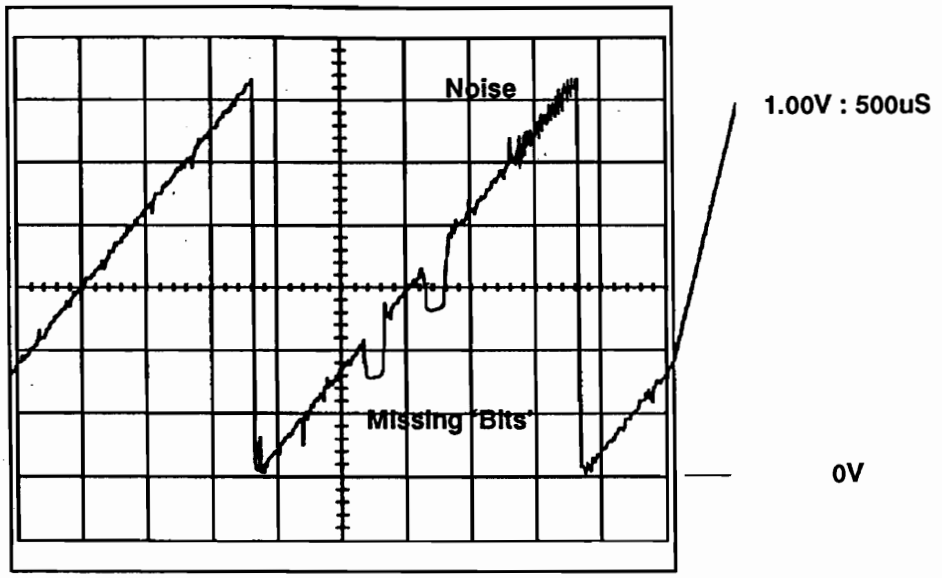

Section 4.28.2 **PVCC Test 3 (walk).**

In this Test the HEX values of 01, 02, 04, 08, 10, 20, 40, and 80 are written to the DAC (DIGITAL to ANALOGUE CONVERTOR) to produce a resultant "stepping" waveform. Enter Test 22 and press the SET key. Displayed will be "PVCC WALK 22". Using an oscilloscope monitor Test point +PVCC on the CAT40 module and compare with the following waveform.

EXPECTED WAVEFORM.

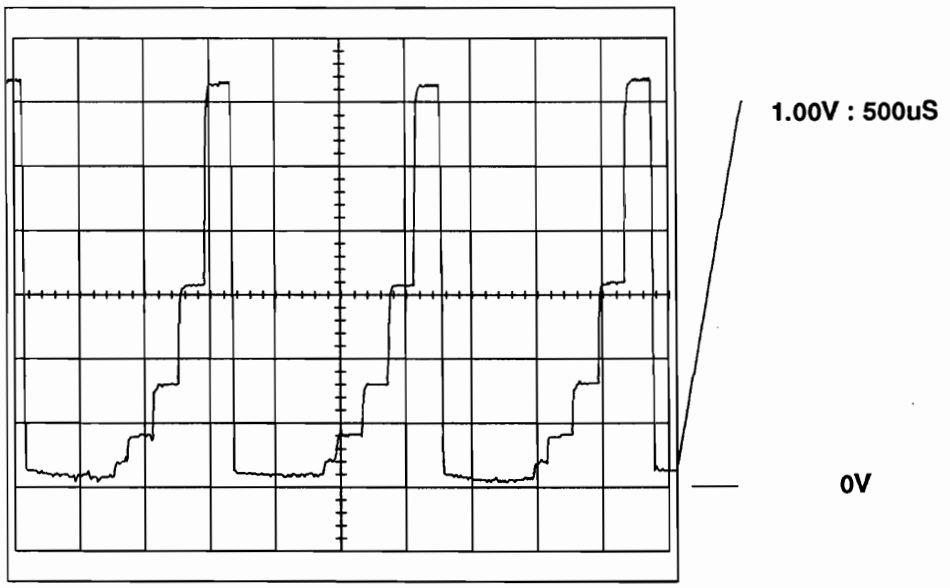

Attention should be made to ensure that the resultant waveform is "Clean" and free from any noise or spikes and that no steps should be missing.
Although 8 steps should in fact be displayed, it is not possible. In most cases only 5 steps will be displayed (as detailed) although in some cases only 4 steps may be visible. These should be treated as a PASS.

EXAMPLE OF FAILURE:

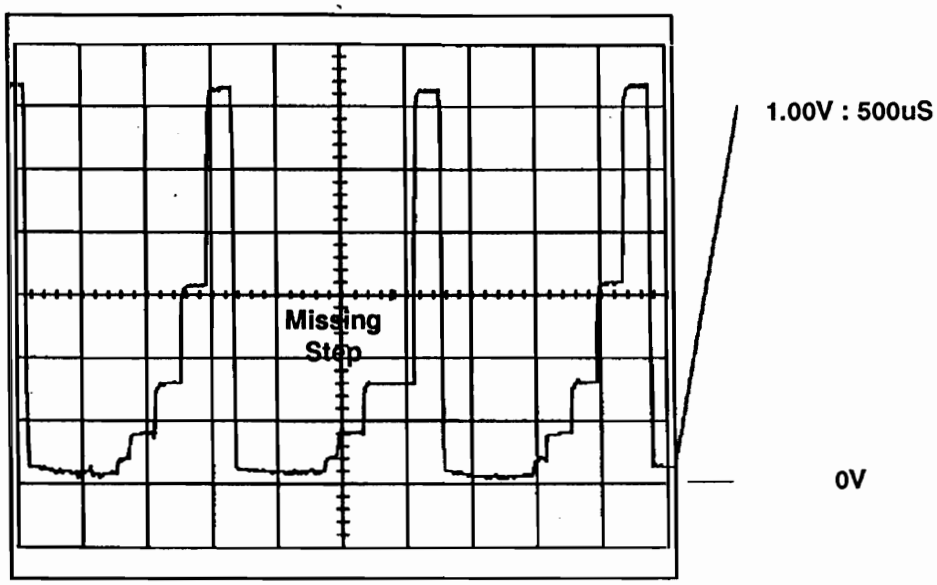

Section 4.28.3 **PVCC Test 4 (Slew Rate Capability)**

The PVCC circuitry has programmable SLEW RATEs (Rise time of the leading edge). In this Test, PVCC is turned on to provide a Square wave, the Slew rate circuits are then turned on and off in turn. These Slew rates have the following values of 0.5, 1.0 and 2.0v/uS. Enter Test 23 and press the SET key. Displayed will be "PVCC SLEW 23". Using an oscilloscope monitor Test point +PVCC on the CAT40 module and compare with the following waveform.

EXPECTED WAVEFORM.

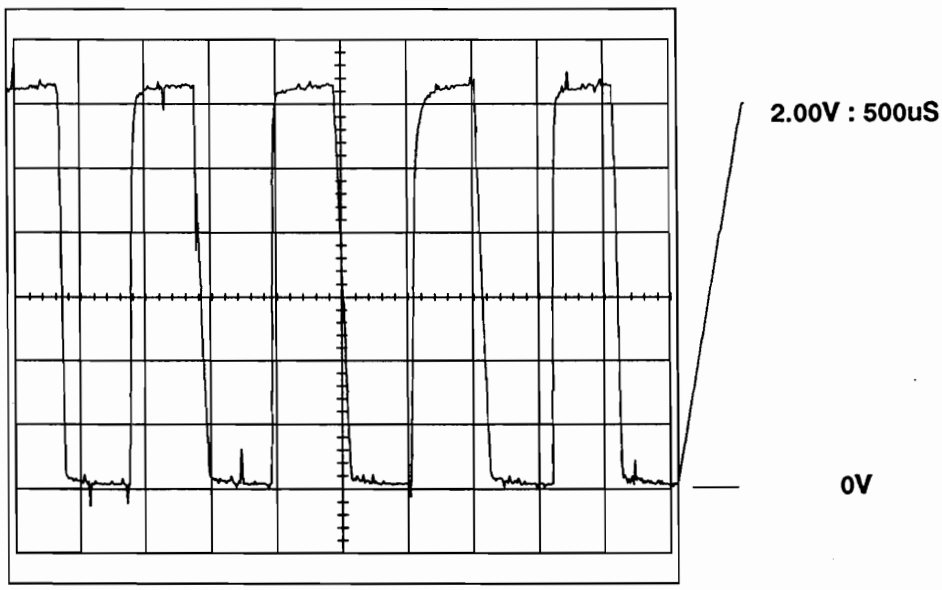

Attention should be made to ensure that the resultant waveform is "Clean" and free from any noise or spikes and that no steps should be missing..

EXAMPLE OF FAILURE:

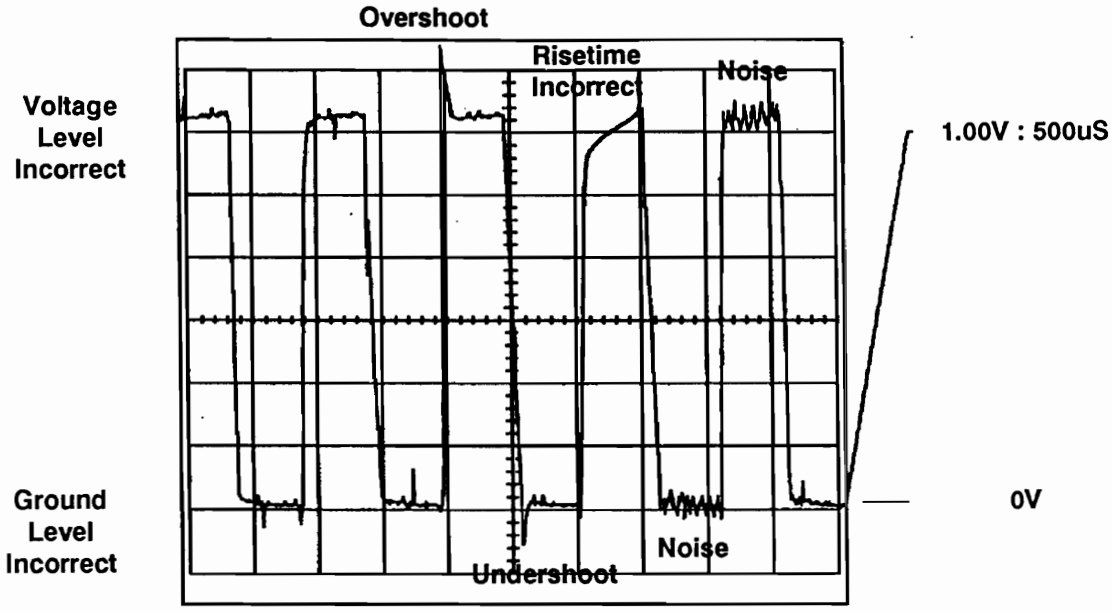

NOTE: Tests 24 to 29 are not used.

Section 4.29 **PVCC Test 5, Current Generator On (square wave)**

In this Test, PVCC plus its current generator circuitry is turned on and cycled to produce a 6.5V square wave. Enter Test 30 and press the SET key.
Displayed will be "PVCC 6.5V SQU 20". Using an oscilloscope monitor Test point +PVCC on the CAT40 module and compare with the following waveform.

EXPECTED WAVEFORM.

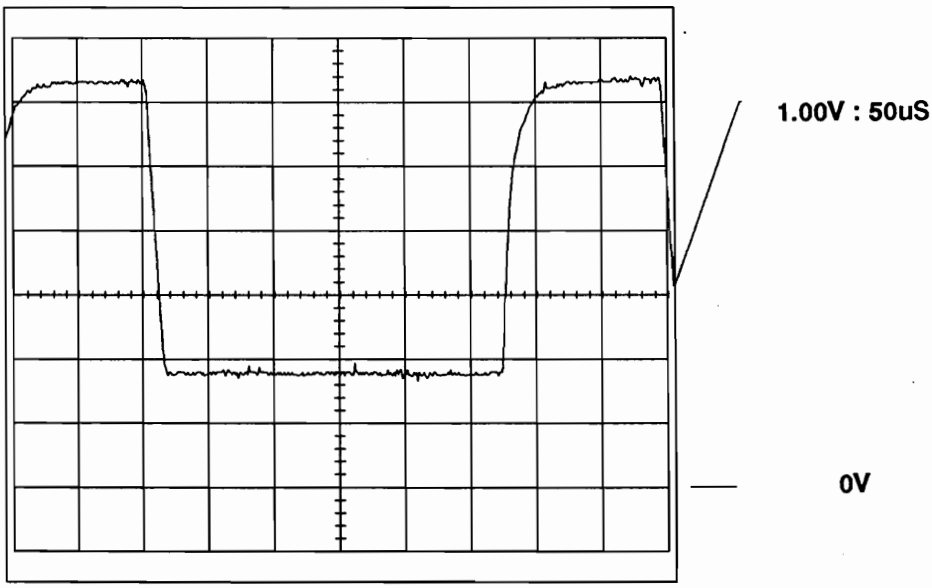

Attention should be made to ensure that the resultant waveform is "Clean" and free from any noise or spikes.

EXAMPLE OF FAILURE:

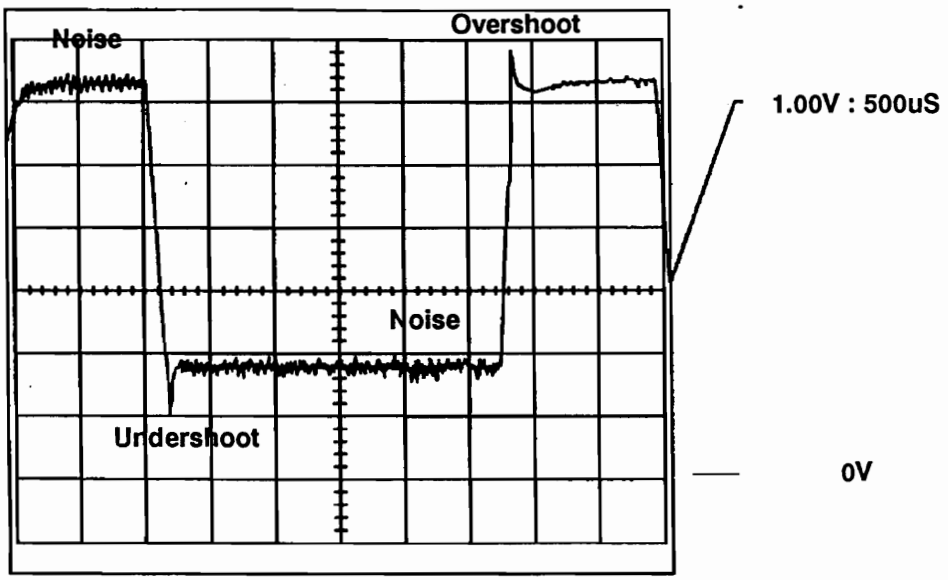

Section 4.29.1 **PVCC Test 6, Current Generator On (ramp)**

In this Test, the PVCC current generator is turned on and every HEX value from "00" to "FF" is written to the PVCC DAC (Digital to analogue Convertor) to produce a resultant linear saw-tooth waveform. Each step or BIT equal to 0.05V will be displayed. Enter Test 31 and press the SET key. Displayed will be "PVCC RAMP 31"
Using an oscilloscope monitor Test point +PVCC on the CAT40 module and compare with the following waveform.

EXPECTED WAVEFORM.

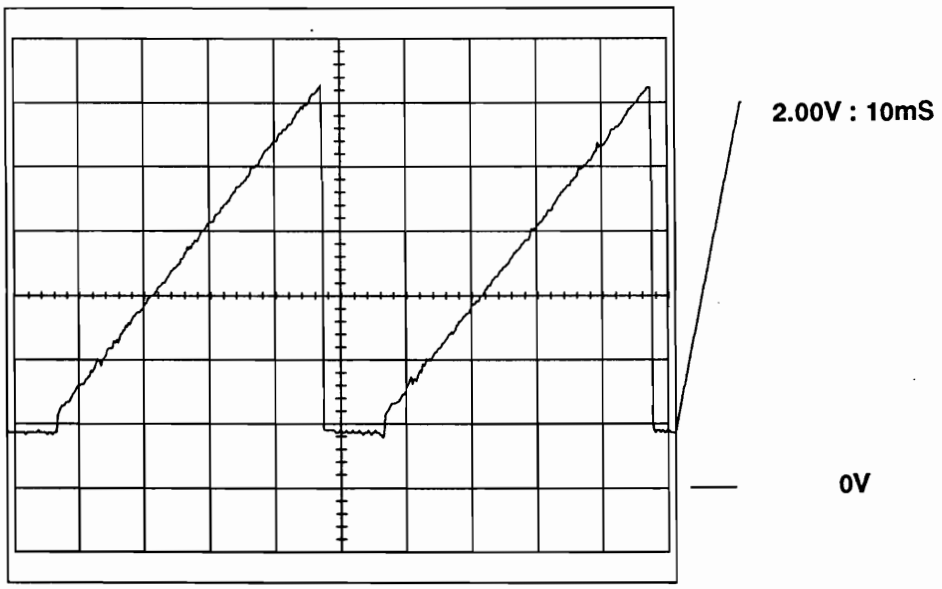

Attention should be made to ensure that the resultant waveform is "Clean" and free from any noise or spikes and that no steps should be missing..

EXAMPLE OF FAILURE:

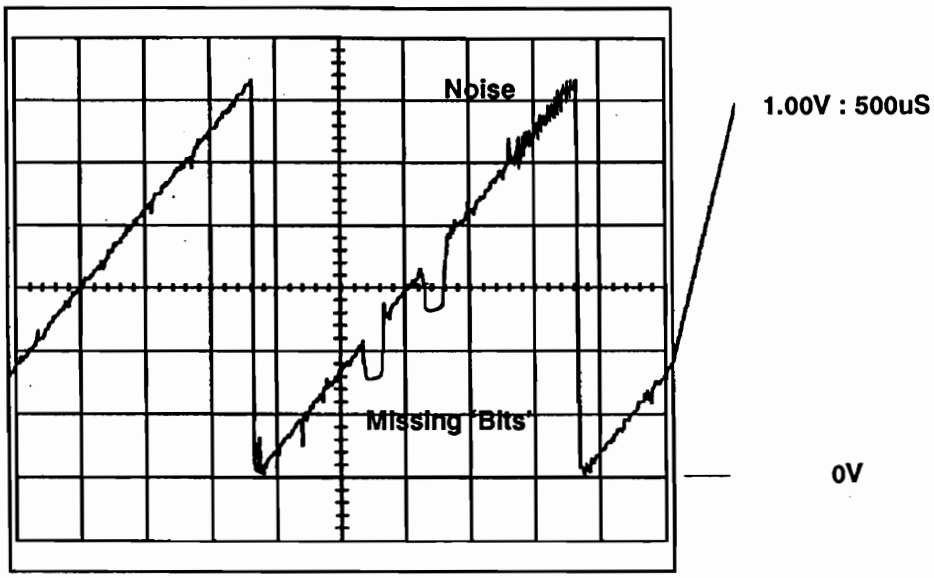

Section 4.29.2 **PVCC Test 7, Current Generator On (walk).**

In this Test, the current generator is turned on and the HEX values of 01, 02, 04, 08, 10, 20, 40, and 80 are written to the DAC (DIGITAL to analogue CONVERTOR) to produce a resultant "stepping" waveform. Enter Test 32 and press the SET key. Displayed will be "PVCC WALK 32". Using an oscilloscope monitor Test point +PVCC on the CAT40 module and compare with the following waveform.

EXPECTED WAVEFORM.

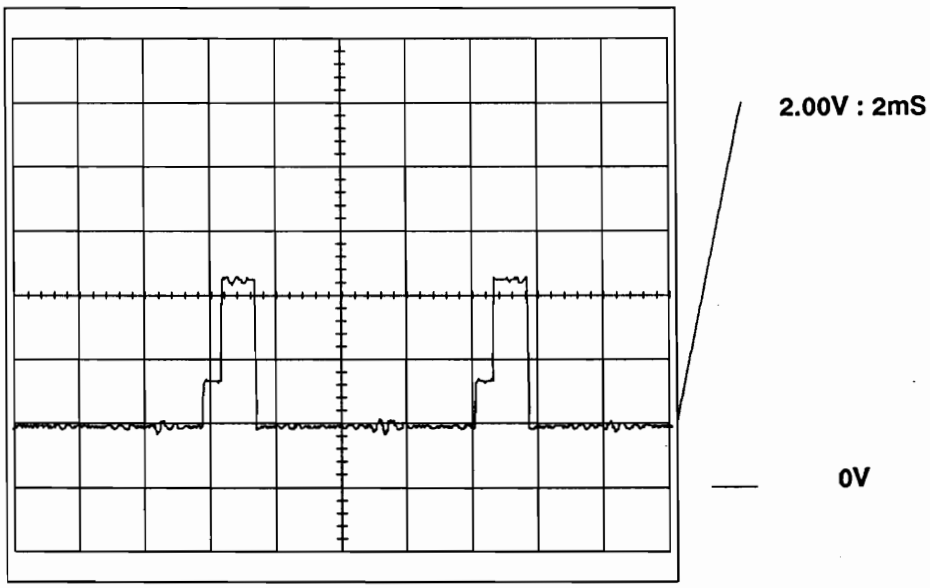

Attention should be made to ensure that the resultant waveform is "Clean" and free from any noise or spikes and that no steps should be missing..

Although 8 steps should in fact be displayed, it is not possible. In most cases only 5 steps will be displayed (as detailed) although in some cases only 4 steps may be visible. These should be treated as a PASS.

EXAMPLE OF FAILURE:

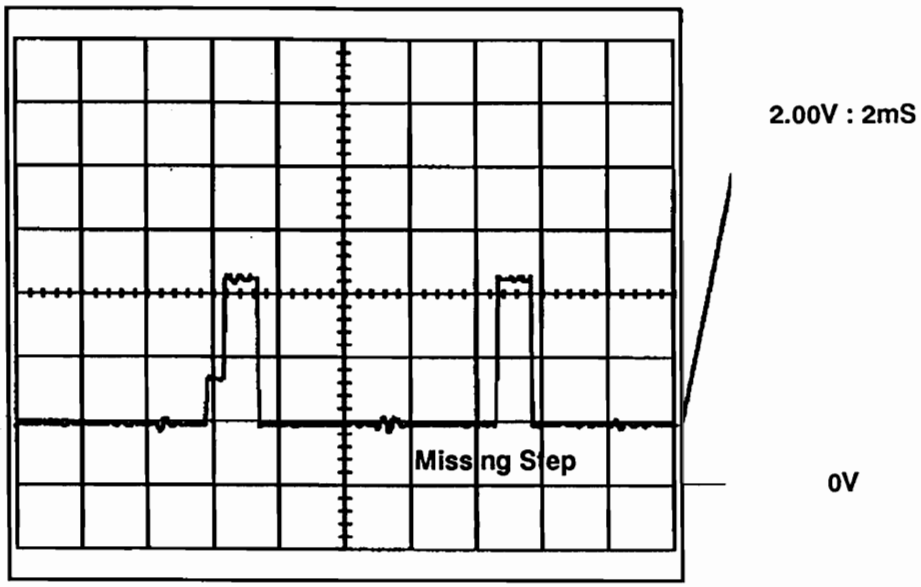

Section 4.29.3 **PVCC Test 8, Current Generator On (slew rate capability)**

The PVCC circuitry has programmable SLEW RATEs (Rise time of the leading edge). In this Test, PVCC with the current generator circuitry is turned on to provide a Square wave, the Slew rate circuits are then turned on and off in turn. These Slew rates have the following values of 0.5, 1.0 and 2.0v/uS. Enter Test 33 and press the SET key. Displayed will be "PVCC SLEW 33". Using an oscilloscope monitor Test point +PVCC on the CAT40 module and compare with the following waveform.

EXPECTED WAVEFORM.

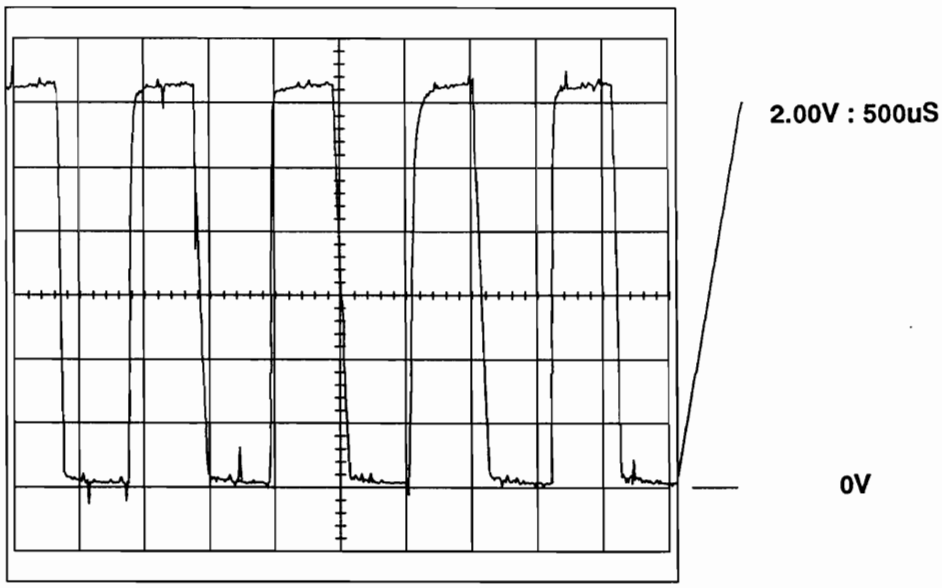

Attention should be made to ensure that the resultant waveform is "Clean" and free from any noise or spikes and that no steps should be missing.

EXAMPLE OF FAILURE:

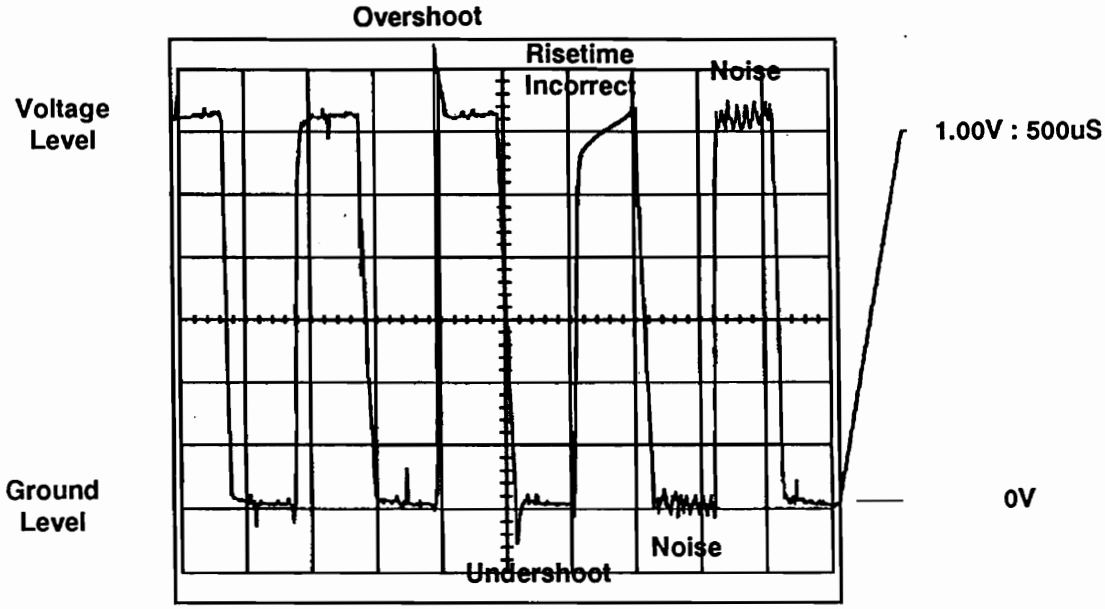

NOTE: Tests 34 to 39 are not used.

Section 4.30 Voltage Clamp Tests

The PP40 series has three programmable voltage reference supplies. These are labelled VC1, VC2, VC3. Their purpose is to clamp the voltage levels applied to the device when it is read or programmed to a pre-determined level. In addition they have the ability to "sink" current in excess of the device requirements. With only one exception these voltage clamps use identical circuitry. The exception being voltage clamp VC3 which has additional Slew Rate capability.

Section 4.31 **Voltage Clamp Test 1 (square wave)**

In these Tests the selected Voltage clamp is cycled to produce a 12.5V square wave.

Enter Test	Displayed	Monitor Test Point.
40	VC1	VC1
50	VC2	VC2
60	VC3	VC3

Using an oscilloscope monitor the relevant Test point on the CAT40 module and compare with the following waveform.

EXPECTED WAVEFORM.

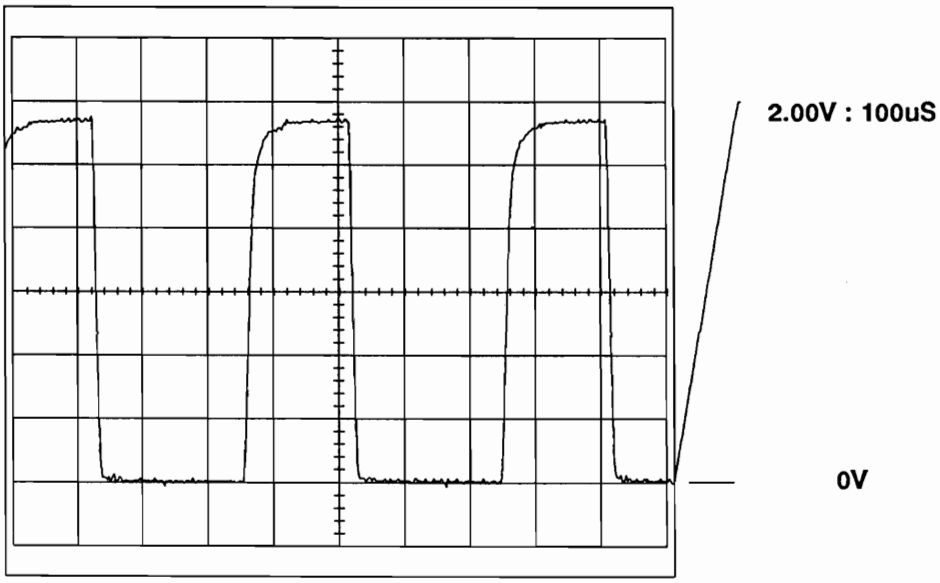

Attention should be made to ensure that the resultant waveform is "Clean" and free from any noise or spikes.

EXAMPLE OF FAILURE:

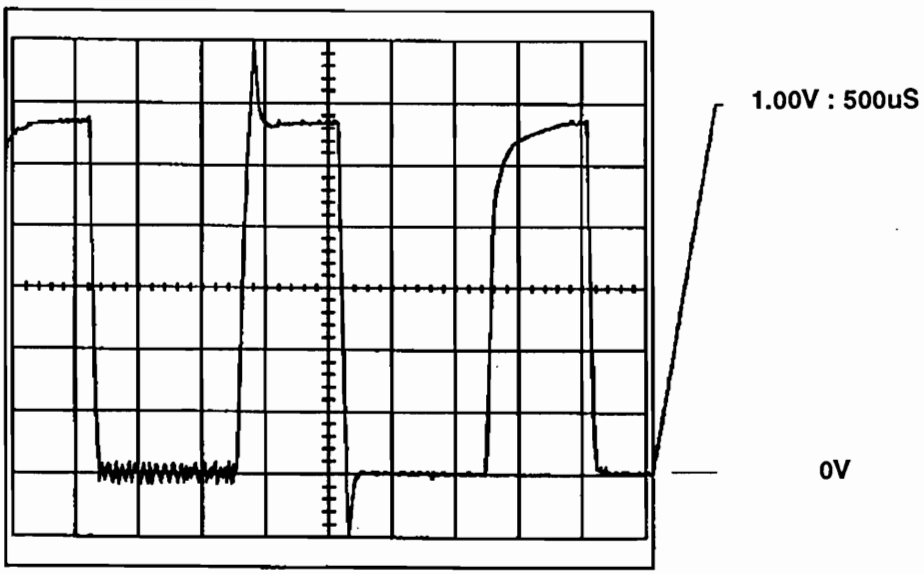

Section 4.31.1 **Voltage Clamp Test 2 (Ramp)**

In this Test, every HEX value from "00" to "FF" is written to the selected Voltage clamp DAC (Digital to analogue Convertor) to produce a resultant linear saw-tooth waveform. Each step or BIT equal to 0.1V will be displayed.

Enter Test	Displayed	Monitor Test Point.
41	VC1	VC1
51	VC2	VC2
61	VC3	VC3

Using an oscilloscope monitor the relevant Test point on the CAT40 module and compare with the following waveform.

EXPECTED WAVEFORM.

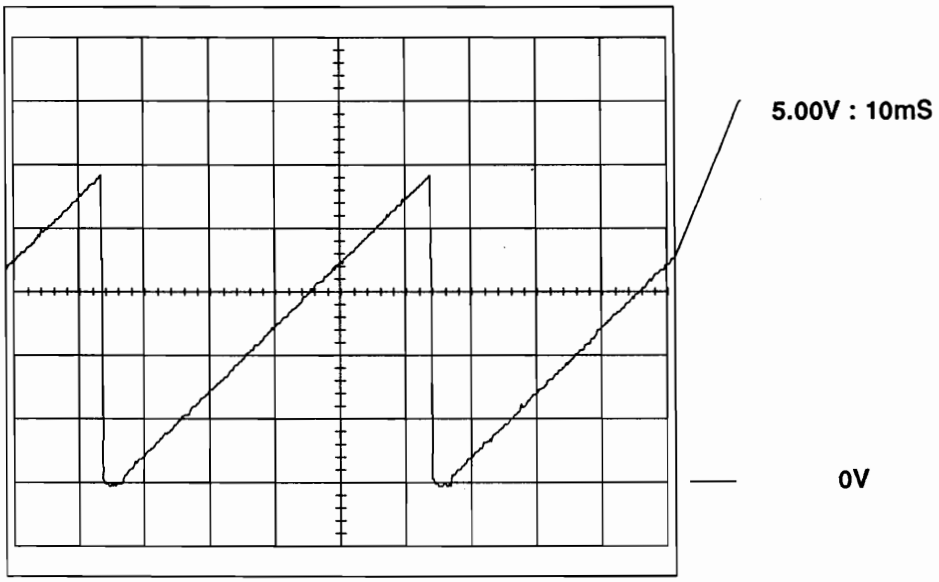

Attention should be made to ensure that the resultant waveform is "Clean" and free from any noise or spikes and that no steps should be missing..

EXAMPLE OF FAILURE:

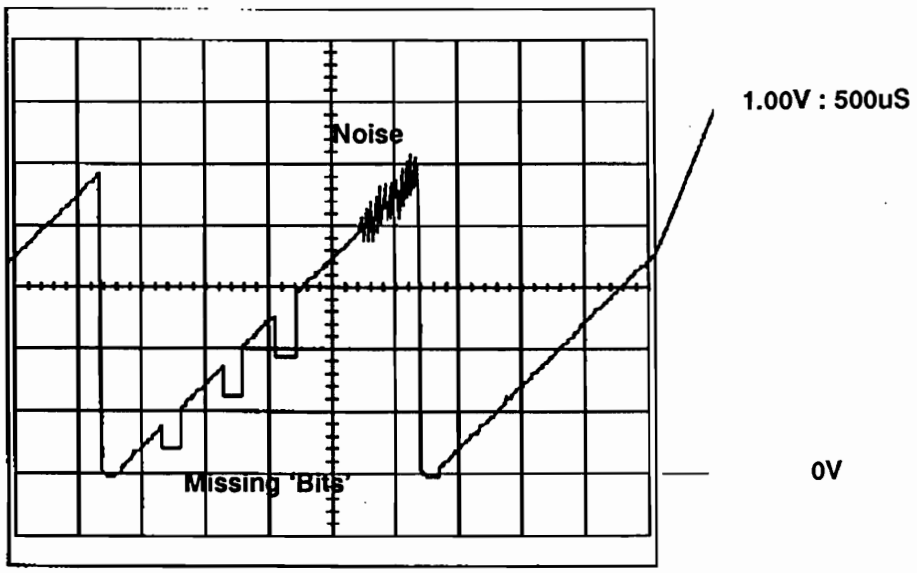

Section 4.31.2 **Voltage Clamp Test 3 (Walk).**

In this Test the HEX values of 01, 02, 04, 08, 10, 20, 40, and 80 are written to the selected voltage clamp DAC (DIGITAL to analogue CONVERTOR) to produce a resultant "stepping" waveform.

Enter Test	Displayed	Monitor Test Point.
42	VC1	VC1
52	VC2	VC2
62	VC3	VC3

Using an oscilloscope monitor the relevant Test point on the CAT40 module and compare with the following waveform.

EXPECTED WAVEFORM.

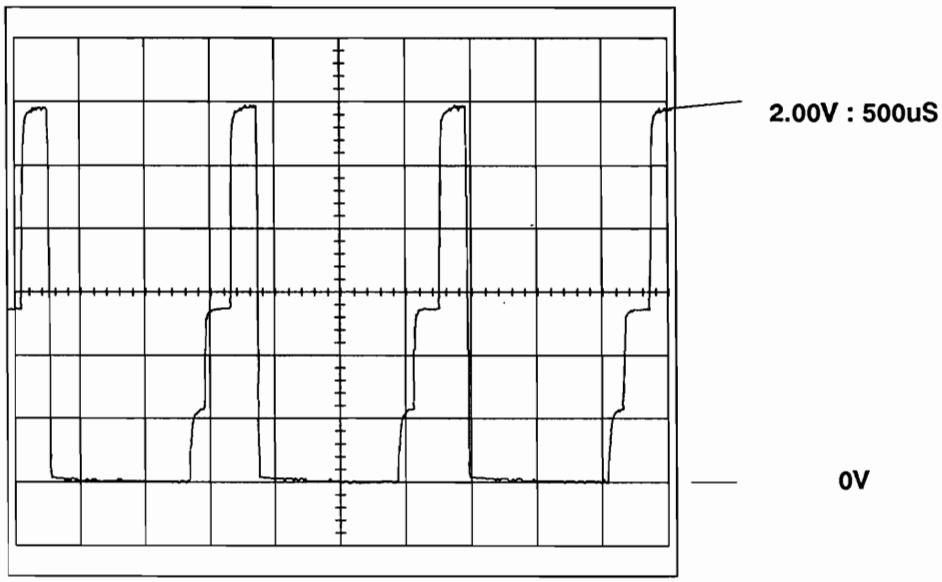

Attention should be made to ensure that the resultant waveform is "Clean" and free from any noise or spikes and that no steps should be missing. Although 8 steps should in fact be displayed, it is not possible. In most cases only 5 steps will be displayed (as detailed) although in some cases only 4 steps may be visible. These should be treated as a PASS.

EXAMPLE OF FAILURE:

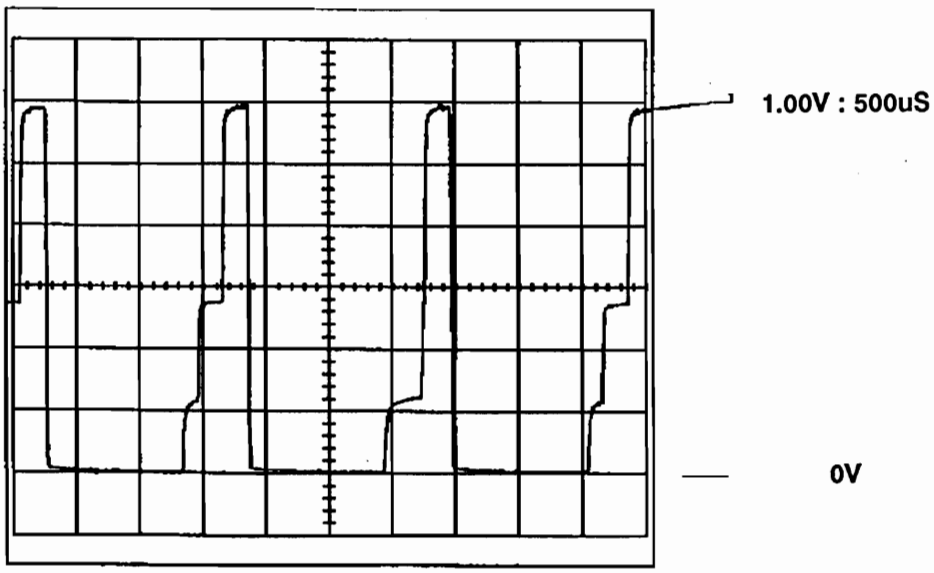

Section 4.31.3 **Voltage Clamp Test 4 (slew rate capability)**

NOTE: This Test applies only to VC3. The voltage clamp VC3 programmable SLEW RATEs (Rise time of the leading edge). In this Test, VC3 is turned on to provide a Square wave, the Slew rate circuits are then turned on and off in turn. These Slew rates have the following values of 0.5, 1.0 and 2.0V/uS.
Enter Test 63 and press the SET key.
Displayed will be "PVCC SLEW 23".

Using an oscilloscope monitor Test point VC3 on the CAT40 module and compare with the following waveform.

EXPECTED WAVEFORM.

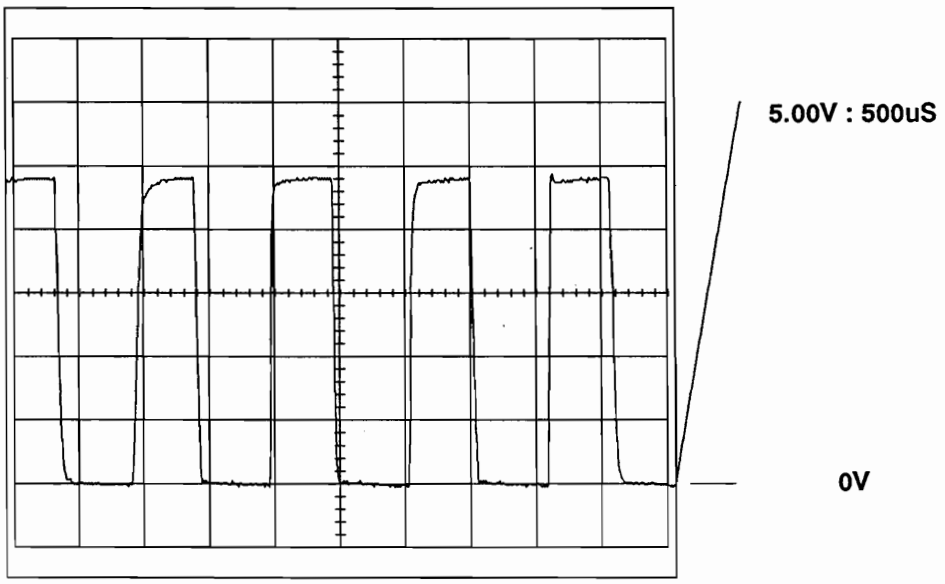

Attention should be made to ensure that the resultant waveform is "Clean" and free from any noise or spikes and that no steps should be missing..

EXAMPLE OF FAILURE:

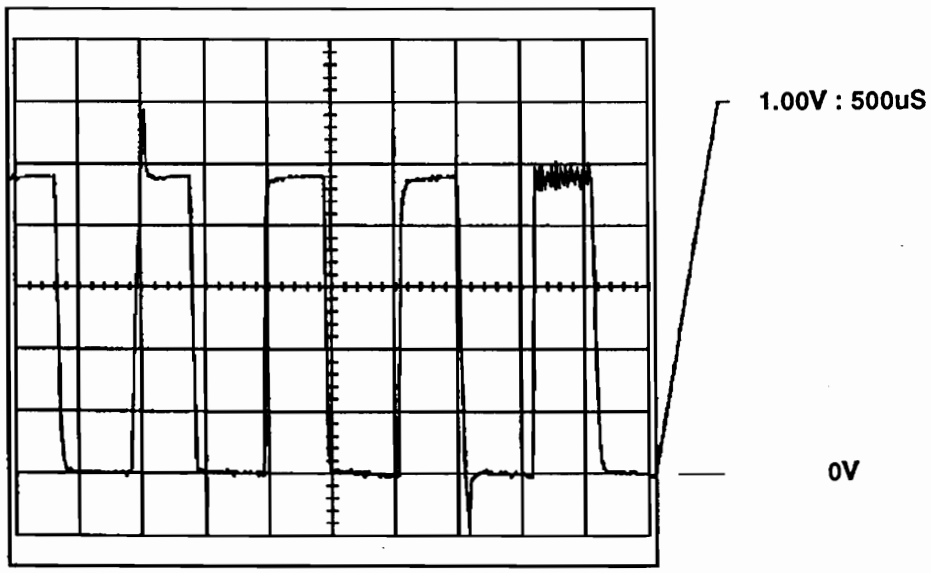

NOTE: Tests 43 to 49, 53 to 59 and 64 to 69 are not used.

Section 4.32 **Display Test.**

In this Test to aid fault diagnosis on the display circuitry, the HEX value "55" is continually written to the display. This will result in the character "U" being displayed in all display locations

Enter Test 70 and press the SET key.

The character "U" will now be displayed in all locations.

PRESS EXIT KEY.

Section 4.33 **Static RAM Test.**

This Test when entered will write a pre-determined Test pattern to the onboard SRAM. It is then read back and confirmed.

The Test patterns are as follows:

TEST 1:	Unique non-repeatable pattern
TEST 2:	Single BYTE pattern 55,AA
TEST 3:	Double BYTE pattern 55,AA single read
TEST 4:	Single BYTE pattern 55,AA double read
TEST 5:	double BYTE pattern 55,AA
TEST 6:	Single BYTE pattern 00,FF

Enter Test 71 and press the SET key

The Test will now proceed to test the static RAM. Any detected failures will result in the test failing and the nature of the failure being displayed. A failure in this test should result in IC31 being replaced.

Section 4.34 **Static RAM Re-boot**

The Static RAM located within the PP40 series is used to store preset parameters for the RS232 interface circuitry and the selected device type which are recalled after power off and on.

In the case where the Static RAM has been replaced or is corrupted, this test writes and stores valid parameters to the Static RAM.

These parameters are as follows:

BAUD RATE:	9600
WORD LENGTH:	8 BITS
STOP BITS:	2
PARITY:	NONE SET
FORMAT:	INTELLEC

Enter Test 72 and press the SET key.

The test will now proceed to default the STATIC RAM to the preset parameters.

PRESS THE EXIT KEY.

Section 4.35 **Test "OLY" Lines.**

These control lines are not used on the CAT40 module.

They are used in operation with the programming modules to "map in" each bank of the module operating software.

Enter Test 73 and press the SET key.

OLY 0-2 WALK will now be displayed.

Monitor test points MOLY1, MOLY2 and MOLY3 on the CAT40 module.

EXPECTED WAVEFORM:

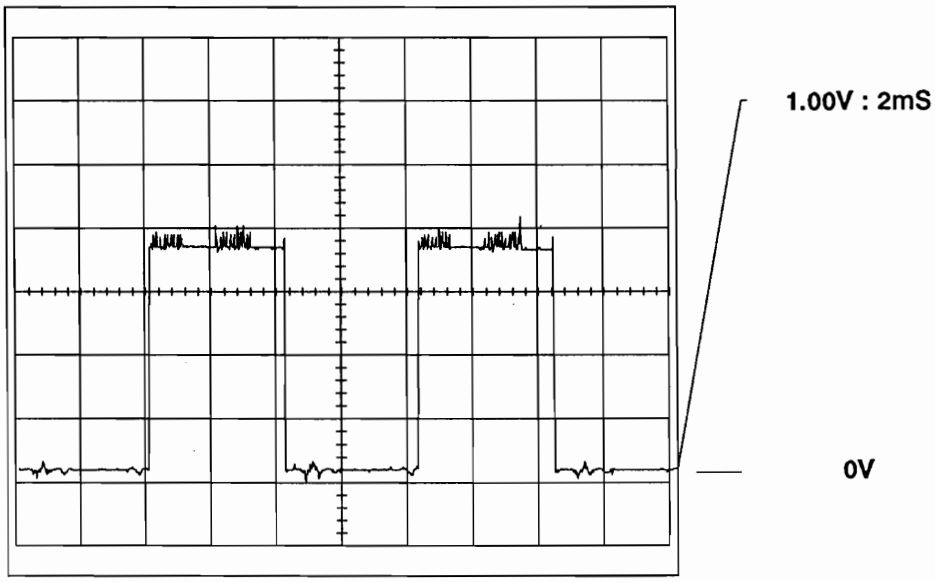

PRESS THE EXIT KEY

Section 4.36 **Checksum The System PROM.**

The SYSTEM PROM (IC14) is located within the mainframe on test. This test will enable the PROM to be checked to ensure, A: That the PROM is inserted correctly. B: That the correct PROM is inplace. C: That the PROM is fully functional.

Enter Test 74 and press the SET key.

After a short delay, the CHECKSUM of the PROM will be displayed. Ensure that this CHECKSUM confirms with that printed on the PROM label.

PRESS THE EXIT KEY.

Section 4.37 **Checksum The Module PROM.**

The module PROM is located within the CAT 40 module. This Test will enable the PROM to be checked to ensure, A: That the PROM is inserted correctley. B: That the correct PROM is inplace. C: That the PROM is fully functional. D: That the mainframe circuitry can correctley enable the PROM.

Enter Test 75 and press the SET key.

After a delay the CHECKSUM of the PROM will be displayed. Ensure that this CHECKSUM confirms with that printed on the PROM label.

PRESS THE EXIT KEY.

Tests 76 to 79 are not used.

Section 4.38 **Display Dynamic RAM Size.**

This Test will only apply to models PP41, PP42 and ZL33.

The Test will allow the size of the RAM extension fitted to any of the above units to be detected and displayed.

Enter Test 80 and press the SET key.

After a short delay the size of the RAM fitted will be displayed in HEX.

000000 Displayed	=	No RAM fitted.
010000 Displayed	=	RAM size 512K
020000 Displayed	=	RAM size 1024K
040000 Displayed	=	RAM size 2048K
080000 Displayed	=	RAM size 4096k

PRESS THE EXIT KEY.

Section 4.39 **Dynamic RAM Test.**

This Test when entered will write a series of pre- determined Test patterns to the onboard DRAM. It is then read back and confirmed.

The Test patterns are as follows:

TEST 6:	Unique non-repeatable pattern
TEST 1:	Single BYTE pattern 55,AA
TEST 2:	Double BYTE pattern 55,AA single read
TEST 3:	Single BYTE pattern 55,AA double read
TEST 4:	double BYTE pattern 55,AA
TEST 5:	Single BYTE pattern 00,FF
TEST 7:	Read Modify Write Test

The RAM is organized into "BANKS" each containing 32K BYTES. Each of the above Tests is performed on these "BANKS".

Enter Test 81 and press the SET key
The Test will now proceed to test each bank in turn.

PRESS THE EXIT KEY.

Tests 82 to 89 are not used.

Section 4.40 **Test RS232 Ports.**

The following Tests only apply to models PP41, PP42 AND ZL33 as they allow the twin RS232 ports to be functionally tested.

The Tests require a connection cable to link between the RS232 ports and a suitable monitor with keyboard although if another STAG programmer with an RS232 port is available then it would be just as suitable for these Tests.

Section 4.41 **RS232 Ports 1 and 2 Selftests**

This Test will require the RS232 ports to be connected together. The connections are as follows.

Port 1		Port 2
Pin 2	connect to	Pin 2
Pin 3	connect to	Pin 3
Pin 7	connect to	Pin 7

With the connections inplace.

Enter Test 90 and press the SET key.

The Test will only indicate a Test PASS or FAIL and as a result should only be used for fault detection. If no failures are detected (A Test PASS is displayed), there is no requirment to proceed further in testing the RS232 circuits.

If a Test FAIL is displayed proceed to the following tests to determine which port has failed and if the failure is either an input or output related fault.

PRESS THE EXIT KEY.

Section 4.42 **RS232 Port 1 Selftest.**

This Test performs a selftest on the UART registors of port 1.
Enter Test 91 and press the SET key.
On completion it will display either a Selftest PASS or FAIL.
PRESS THE EXIT KEY.

Section 4.43 **RS232 Port 2 Selftest.**

This Test performs a selftest on the UART registors of port 2.
Enter Test 92 and press the SET key.
On completion it will display either a Selftest PASS or FAIL.
PRESS THE EXIT KEY.

Section 4.44 **RS232 Fault Diagnostic Methods.**

The previous Tests have only allowed the engineer to perform "selftests" on the RS232 ports. If these Tests have passed then no further Tests on the RS232 circuitry is required.
If however a failure is detected then the engineer has two options in aiding fault diagnostics. In both of these options a suitable RS232 connection cable is required, (the standard 3 way cable for example)

Option A: Requires a monitor with keyboard.
Option B: A STAG programmer with RS232 capability. (A PP41 is used in the following examples)

In option A the monitor should be configured in the following way.

BAUD rate	=	9600
WORD length	=	8
STOP BITS	=	2
PARITY	=	No parity set

Section 4.45 **RS232 Output Port 1 (option A)**

Connect the monitor to RS232 port 1.
Enter Test 93 and press the SET key.
The Test will output the following Test string to the monitor.
"I/O OUTPUT PORT 1 TEST STRING 01234ABCDE"
PRESS THE EXIT KEY.

Section 4.46 **RS232 Output Port 2 (option A)**

Connect the monitor to RS232 port 2.
Enter Test 94 and press the SET key.
The Test will output the following Test string to the monitor.
"I/O OUTPUT PORT 2 TEST STRING 56789FGHIJ"
PRESS THE EXIT KEY.

Section 4.47 **RS232 Input Port 1 (option A)**

Connect the monitor to RS232 port 1
Enter Test 95 and press the SET key
This Test allows keyboard entries to to be displayed on the programmer under test display.
PRESS THE EXIT KEY.

Section 4.48 **RS232 Input Port 2 (option A)**

Connect the monitor to RS232 port 2
Enter Test 96 and press the SET key
This Test allows keyboard entries to to be displayed on the programmer under test display.
PRESS THE EXIT KEY.

If a suitable monitor is not available then another programmer with an RS232 port can be used. In the following example a PP41 programmer is used as it also has twin RS232 ports with male and female connections and thus only one type of cable connection is requied.

Section 4.5 **Power Supply Operation.**

The PSU used within the PP40 series is of the switch mode type. No fault diagnostic information or circuit diagrams for this PCB is included in this manual for it is to be treated as a single component and as a result is not field servicable. If the PSU fails or is suspected it should be replaced.

Order replacement part number 110-0011.

Section 5 Components and Items Lists

COMPONENT LIST 110-0031 PP40 MAINBOARD PCB ASSY ISSUE 9

REG 1	306 3175	VOLTAGE REGULATOR LM317L
REG 2	306 207	VOLTAGE REGULATOR 78L12
REG 3	306 515	VOLTAGE REGULATOR 78L15
REG 4	306 3175	VOLTAGE REGULATOR LM317L
CON 1	462 043	MOLEX CONNECTOR 14 WAY 22-03-2141
CON 2	462 100	CONNECTOR DIN FEMALE 64 WAY
CON 3	462 105	CONNECTOR DIN FEMALE 48 WAY
CON 4	462 105	CONNECTOR DIN FEMALE 48 WAY
LED 1	309 165	DISPLAY FIP 16A5R
IC 1	313 244	IC 74LS244 OCTAL 3 STATE DRIVER
IC 2	320 8095	IC MC68B09EP 8 BIT 2MHz PROCESSOR
IC 3	313 259	IC 74LS259 8 BIT ADDRESSABLE LATCH
IC 4	315 461	IC 75461 PERIPHERAL DRIVER
IC 5	315 461	IC 75461 PERIPHERAL DRIVER
IC 6	313 244	IC 74LS244 OCTAL 3 STATE DRIVER
IC 7	314 905	IC LM2905 TIMER
IC 8	313 259	IC 74LS259 8 BIT ADDRESSABLE LATCH
IC 9	314 339	IC LM339 QUAD COMPARATOR
IC 10	315 461	IC 75461 PERIPHERAL DRIVER
IC 11	314 339	IC LM339 QUAD COMPARATOR
IC 12	315 461	IC 75461 PERIPHERAL DRIVER
IC 13	313 245	IC 74LS245 OCT 3 STATE BUS T/CEIVER
IC 14	401 028	DIL SOCKET 28 WAY
IC 15	110-0072	FPLA 319 153 PP40 PCB IC15
IC 16	313 259	IC 74LS259 8 BIT ADDRESSABLE LATCH
IC 17	314 339	IC LM339 QUAD COMPARATOR
IC 18	315 461	IC 75461 PERIPHERAL DRIVER
IC 19	314 339	IC LM339 QUAD COMPARATOR
IC 20	315 461	IC 75461 PERIPHERAL DRIVER
IC 21	315 462	IC 75462 PERIPHERAL DRIVER
IC 22	315 462	IC 75462 PERIPHERAL DRIVER
IC 23	313 244	IC 74LS244 OCTAL 3 STATE DRIVER
IC 24	313 259	IC 74LS259 8 BIT ADDRESSABLE LATCH
IC 25	313 244	IC 74LS244 OCTAL 3 STATE DRIVER
IC 26	315 461	IC 75461 PERIPHERAL DRIVER
IC 27	313 244	IC 74LS244 OCTAL 3 STATE DRIVER
IC 28	315 461	IC 75461 PERIPHERAL DRIVER
IC 29	315 462	IC 75462 PERIPHERAL DRIVER
IC 30	315 462	IC 75462 PERIPHERAL DRIVER
IC 31	317 516	IC 5516APL 2Kx8 LP CMOS SRAM
IC 32	110-0074	FPLA 319 153 PP40 PCB IC32
IC 33	313 259	IC 74LS259 8 BIT ADDRESSABLE LATCH
IC 34	315 461	IC 75461 PERIPHERAL DRIVER
IC 35	315 461	IC 75461 PERIPHERAL DRIVER
IC 36	315 461	IC 75461 PERIPHERAL DRIVER
IC 37	315 461	IC 75461 PERIPHERAL DRIVER
IC 38	110-0073	PAL 319 169 PP40 PCB IC38
IC 39	313 259	IC 74LS259 8 BIT ADDRESSABLE LATCH
IC 40	311 241	IC 74ALS241 OCT BUS/LINE DRIV S ST
IC 41	110-0075	FPLA 319 153 PP40 PCB IC41
IC 42	313 259	IC 74LS259 8 BIT ADDRESSABLE LATCH
IC 43	314 803	IC ULN2803 OCTAL DARLINGTON ARRAY
IC 44	314 803	IC ULN2803 OCTAL DARLINGTON ARRAY
IC 45	314 212	IC ICL8212CPA PROG VOLT DETECTOR
IC 46	313 000	IC 74LS00 QUAD 2 IN NAND GATE
IC 47	308 007	CRYSTAL OSCILLATOR 16.000MHz
IC 48	313 244	IC 74LS244 OCTAL 3 STATE DRIVER
IC 49	313 259	IC 74LS259 8 BIT ADDRESSABLE LATCH
IC 50	315 462	IC 75462 PERIPHERAL DRIVER
IC 51	315 462	IC 75462 PERIPHERAL DRIVER
IC 52	320 937	IC 10937P-40 DISPLAY DRIVER
IC 53	20-0064	MODIFIED TDK1867 PSU
IC 54	315 461	IC 75461 PERIPHERAL DRIVER
IC 55	315 461	IC 75461 PERIPHERAL DRIVER
IC 56	315 461	IC 75461 PERIPHERAL DRIVER
IC 57	315 461	IC 75461 PERIPHERAL DRIVER
IC 58	313 032	IC 74LS32 QUAD 2 IN OR GATE
IC 59	313 221	IC 74LS221 DUAL MONOSTABLE
IC 60	314 803	IC ULN2803 OCTAL DARLINGTON ARRAY
IC 61	314 803	IC ULN2803 OCTAL DARLINGTON ARRAY
IC 62	315 462	IC 75462 PERIPHERAL DRIVER
IC 63	313 074	IC 74LS74 DUAL D FLIP FLOP
IC 64	313 165	IC 74LS165 8 BIT SHIFT REG PISO
IC 65	313 273	IC 74LS273 OCT D FLIP FLOP/CLEAR
IC 66	314 393	IC LM393 DUAL COMPARATOR
IC 67	314 393	IC LM393 DUAL COMPARATOR
IC 68	313 000	IC 74LS00 QUAD 2 IN NAND GATE
IC 69	313 273	IC 74LS273 OCT D FLIP FLOP/CLEAR
IC 70	310 006	IC 7406 HEX INVERTER BUFFER
IC 71	314 339	IC LM339 QUAD COMPARATOR
IC 72	320 8215	IC 68B21 PIA 2MHz
IC 73	310 007	IC 7407 HEX BUFFER
IC 74	314 084	IC OP AMP TL084
IC 75	313 163	IC 74LS163 SYNC BIN COUNT/SYN CLEAR
IC 76	313 245	IC 74LS245 OCT 3 STATE BUS T/CEIVER
IC 77	313 273	IC 74LS273 OCT D FLIP FLOP/CLEAR
IC 78	314 084	IC OP AMP TL084
IC 79	314 084	IC OP AMP TL084
IC 80	313 244	IC 74LS244 OCTAL 3 STATE DRIVER
IC 81	313 244	IC 74LS244 OCTAL 3 STATE DRIVER
IC 82	313 244	IC 74LS244 OCTAL 3 STATE DRIVER
IC 83	316 628	IC MP7628JN D TO A CONVERTER

COMPONENT LIST 110-0031 PP40 MAINBOARD PCB ASSY ISSUE 9

TR 1	110-0057	PP40 10 TRANSISTOR HEATSINK ASSY
TR 3	110-0057	PP40 10 TRANSISTOR HEATSINK ASSY
TR 5	110-0065	PP40 4 TRANSISTOR HEATSINK ASSY
TR 25	110-0010	PP40 1 TRANSISTOR HEATSINK ASSY
TR 26	290 251	TRANSISTOR TEO2226 SELECTED MJE251
TR 27	290 251	TRANSISTOR TEO2226 SELECTED MJE251
TR 28	290 251	TRANSISTOR TEO2226 SELECTED MJE251
TR 29	290 251	TRANSISTOR TEO2226 SELECTED MJE251
TR 30	290 251	TRANSISTOR TEO2226 SELECTED MJE251
TR 31	290 251	TRANSISTOR TEO2226 SELECTED MJE251
TR 32	290 251	TRANSISTOR TEO2226 SELECTED MJE251
TR 33	290 251	TRANSISTOR TEO2226 SELECTED MJE251
TR 34	290 240	TRANSISTOR MJE240
TR 35	295 550	TRANSISTOR 2N5550
TR 36	295 550	TRANSISTOR 2N5550
TR 37	290 056	TRANSISTOR MPSA56
TR 38	290 251	TRANSISTOR TEO2226 SELECTED MJE251
TR 39	290 251	TRANSISTOR TEO2226 SELECTED MJE251
TR 40	290 251	TRANSISTOR TEO2226 SELECTED MJE251
TR 41	290 251	TRANSISTOR TEO2226 SELECTED MJE251
TR 42	290 251	TRANSISTOR TEO2226 SELECTED MJE251
TR 43	290 251	TRANSISTOR TEO2226 SELECTED MJE251
TR 44	290 251	TRANSISTOR TEO2226 SELECTED MJE251
TR 45	290 251	TRANSISTOR TEO2226 SELECTED MJE251
TR 46	295 550	TRANSISTOR 2N5550
TR 47	295 550	TRANSISTOR 2N5550
TR 48	290 056	TRANSISTOR MPSA56
TR 49	110-0010	PP40 1 TRANSISTOR HEATSINK ASSY
TR 50	290 251	TRANSISTOR TEO2226 SELECTED MJE251
TR 51	290 251	TRANSISTOR TEO2226 SELECTED MJE251
TR 52	295 462	TRANSISTOR JFET 2N5462
TR 53	295 462	TRANSISTOR JFET 2N5462
TR 54	290 056	TRANSISTOR MPSA56
TR 55	290 251	TRANSISTOR TEO2226 SELECTED MJE251
TR 56	295 550	TRANSISTOR 2N5550
TR 57	290 056	TRANSISTOR MPSA56
TR 58	290 251	TRANSISTOR TEO2226 SELECTED MJE251
TR 59	295 550	TRANSISTOR 2N5550
TR 60	290 056	TRANSISTOR MPSA56
TR 61	295 550	TRANSISTOR 2N5550
TR 62	290 251	TRANSISTOR TEO2226 SELECTED MJE251
TR 63	290 056	TRANSISTOR MPSA56
TR 64	290 240	TRANSISTOR MJE240
TR 65	290 251	TRANSISTOR TEO2226 SELECTED MJE251
TR 66	290 056	TRANSISTOR MPSA56
TR 67	295 550	TRANSISTOR 2N5550
TR 68	295 550	TRANSISTOR 2N5550
TR 69	295 550	TRANSISTOR 2N5550
TR 70	295 550	TRANSISTOR 2N5550
TR 71	295 462	TRANSISTOR JFET 2N5462
TR 72	295 462	TRANSISTOR JFET 2N5462
RN 1	174 102	RESISTOR NETWORK SIL 8pin 4rs 1K
RN 2	174 102	RESISTOR NETWORK SIL 8pin 4rs 1K
RN 3	174 102	RESISTOR NETWORK SIL 8pin 4rs 1K
RN 4	174 102	RESISTOR NETWORK SIL 8pin 4rs 1K
RN 5	173 472	RESISTOR NETWORK SIL 9pin 8rs 4K7
RN 6	174 103	RESISTOR NETWORK SIL 8pin 4rs 10K
RN 7	173 472	RESISTOR NETWORK SIL 9pin 8rs 4K7
RN 8	174 103	RESISTOR NETWORK SIL 8pin 4rs 10K
RN 9	174 103	RESISTOR NETWORK SIL 8pin 4rs 10K
RN 10	174 103	RESISTOR NETWORK SIL 8pin 4rs 10K
RN 11	173 103	RESISTOR NETWORK SIL 9pin 8rs 10K
RN 12	174 103	RESISTOR NETWORK SIL 8pin 4rs 10K
RN 13	174 103	RESISTOR NETWORK SIL 8pin 4rs 10K
RN 14	174 103	RESISTOR NETWORK SIL 8pin 4rs 10K
RN 15	174 103	RESISTOR NETWORK SIL 8pin 4rs 10K
RN 16	174 104	RESISTOR NETWORK SIL 8pin 4rs 100K
RN 17	174 104	RESISTOR NETWORK SIL 8pin 4rs 100K
RN 18	174 104	RESISTOR NETWORK SIL 8pin 4rs 100K
RN 19	174 104	RESISTOR NETWORK SIL 8pin 4rs 100K
RN 20	174 104	RESISTOR NETWORK SIL 8pin 4rs 100K
RN 21	174 104	RESISTOR NETWORK SIL 8pin 4rs 100K
RN 22	174 101	RESISTOR NETWORK SIL 8pin 4rs 100R
RN 23	173 332	RESISTOR NETWORK SIL 9pin 8rs 3K3
RN 24	173 332	RESISTOR NETWORK SIL 9pin 8rs 3K3
RN 25	174 103	RESISTOR NETWORK SIL 8pin 4rs 10K
RN 26	174 101	RESISTOR NETWORK SIL 8pin 4rs 100R
RN 27	174 332	RESISTOR NETWORK SIL 8pin 4rs 3K3
RN 28	174 332	RESISTOR NETWORK SIL 8pin 4rs 3K3
RN 29	174 332	RESISTOR NETWORK SIL 8pin 4rs 3K3
RN 30	174 332	RESISTOR NETWORK SIL 8pin 4rs 3K3
RN 31	174 103	RESISTOR NETWORK SIL 8pin 4rs 10K
RN 32	174 103	RESISTOR NETWORK SIL 8pin 4rs 10K
RN 33	174 103	RESISTOR NETWORK SIL 8pin 4rs 10K
RN 34	174 102	RESISTOR NETWORK SIL 8pin 4rs 1K
RN 35	174 102	RESISTOR NETWORK SIL 8pin 4rs 1K
RN 36	174 104	RESISTOR NETWORK SIL 8pin 4rs 100K
RN 37	174 104	RESISTOR NETWORK SIL 8pin 4rs 100K
RN 38	174 103	RESISTOR NETWORK SIL 8pin 4rs 10K
RN 39	173 104	RESISTOR NETWORK SIL 9pin 8rs 100K
RN 40	173 104	RESISTOR NETWORK SIL 9pin 8rs 100K
RN 41	173 332	RESISTOR NETWORK SIL 9pin 8rs 3K3
RN 42	174 103	RESISTOR NETWORK SIL 8pin 4rs 10K
RN 43	173 104	RESISTOR NETWORK SIL 9pin 8rs 100K
RN 44	173 104	RESISTOR NETWORK SIL 9pin 8rs 100K

COMPONENT LIST 110-0031 PP40 MAINBOARD PCB ASSY ISSUE 9

RN 45	174 332	RESISTOR NETWORK SIL 8pin 4rs 3K3
RN 46	174 103	RESISTOR NETWORK SIL 8pin 4rs 10K
RN 47	174 332	RESISTOR NETWORK SIL 8pin 4rs 3K3
RN 48	173 332	RESISTOR NETWORK SIL 9pin 8rs 3K3
RN 49	174 332	RESISTOR NETWORK SIL 8pin 4rs 3K3
RN 50	174 103	RESISTOR NETWORK SIL 8pin 4rs 10K
RN 51	174 332	RESISTOR NETWORK SIL 8pin 4rs 3K3
RN 52	174 102	RESISTOR NETWORK SIL 8pin 4rs 1K
RN 53	174 102	RESISTOR NETWORK SIL 8pin 4rs 1K
RN 54	20-0054	HYBRID RESISTOR PACK
RN 55	20-0054	HYBRID RESISTOR PACK
RN 56	173 332	RESISTOR NETWORK SIL 9pin 8rs 3K3
RN 57	20-0054	HYBRID RESISTOR PACK
RN 58	20-0054	HYBRID RESISTOR PACK
VR 1	166 502	POT 3/8 SQ CERMET 5K
VR 2	166 502	POT 3/8 SQ CERMET 5K
VR 3	166 502	POT 3/8 SQ CERMET 5K
VR 4	166 502	POT 3/8 SQ CERMET 5K
DN 1	10-0148	DIODE PACK 8 DIODES 1N4148
DN 2	10-0148	DIODE PACK 8 DIODES 1N4148
DN 3	10-0150	DIODE PACK 8 DIODES 1N4150
DN 4	10-0148	DIODE PACK 8 DIODES 1N4148
DN 5	10-0148	DIODE PACK 8 DIODES 1N4148
DN 6	10-0150	DIODE PACK 8 DIODES 1N4150
DN 7	10-0150	DIODE PACK 8 DIODES 1N4150
DN 8	10-0150	DIODE PACK 8 DIODES 1N4150
DN 9	10-0150	DIODE PACK 8 DIODES 1N4150
DN 10	10-0148	DIODE PACK 8 DIODES 1N4148
DN 11	10-0148	DIODE PACK 8 DIODES 1N4148
DN 12	10-0150	DIODE PACK 8 DIODES 1N4150
DN 13	10-0150	DIODE PACK 8 DIODES 1N4150
DN 14	10-0148	DIODE PACK 8 DIODES 1N4148
DN 15	10-0148	DIODE PACK 8 DIODES 1N4148
DN 16	10-0150	DIODE PACK 8 DIODES 1N4150
DN 17	10-0148	DIODE PACK 8 DIODES 1N4148
DN 18	10-0150	DIODE PACK 8 DIODES 1N4150
DN 19	10-0148	DIODE PACK 8 DIODES 1N4148
DN 20	10-0148	DIODE PACK 8 DIODES 1N4148
DN 21	10-0148	DIODE PACK 8 DIODES 1N4148
R 1	131 470	RESISTOR CARBON FILM 0.25W 5% 47R
R 2	131 104	RESISTOR CARBON FILM 0.25W 5% 100K
R 3	131 103	RESISTOR CARBON FILM 0.25W 5% 10K
R 4	134 332	RESISTOR METAL FILM 0.25W 1% 3k3
R 5	134 222	RESISTOR METAL FILM 0.25W 1% 2K2
R 6	136 047	RESISTOR METAL FILM 0.5W 10% 0R47
R 7	131 102	RESISTOR CARBON FILM 0.25W 5% 1K0
R 9	131 102	RESISTOR CARBON FILM 0.25W 5% 1K0
R 10	136 047	RESISTOR METAL FILM 0.5W 10% 0R47
R 11	131 103	RESISTOR CARBON FILM 0.25W 5% 10K
R 12	131 472	RESISTOR CARBON FILM 0.25W 5% 4K7
R 13	136 047	RESISTOR METAL FILM 0.5W 10% 0R47
R 14	135 220	RESISTOR THICK FILM 0.5W 2% 22R
R 15	135 220	RESISTOR THICK FILM 0.5W 2% 22R
R 16	135 220	RESISTOR THICK FILM 0.5W 2% 22R
R 17	135 220	RESISTOR THICK FILM 0.5W 2% 22R
R 18	131 222	RESISTOR CARBON FILM 0.25W 5% 2K2
R 19	135 220	RESISTOR THICK FILM 0.5W 2% 22R
R 20	135 220	RESISTOR THICK FILM 0.5W 2% 22R
R 21	135 220	RESISTOR THICK FILM 0.5W 2% 22R
R 22	135 220	RESISTOR THICK FILM 0.5W 2% 22R
R 23	132 150	RESISTOR CARBON FILM 0.5W 5% 15R
R 24	131 472	RESISTOR CARBON FILM 0.25W 5% 4K7
R 25	131 472	RESISTOR CARBON FILM 0.25W 5% 4K7
R 26	131 222	RESISTOR CARBON FILM 0.25W 5% 2K2
R 27	131 103	RESISTOR CARBON FILM 0.25W 5% 10K
R 28	131 222	RESISTOR CARBON FILM 0.25W 5% 2K2
R 29	131 103	RESISTOR CARBON FILM 0.25W 5% 10K
R 30	131 103	RESISTOR CARBON FILM 0.25W 5% 10K
R 31	131 103	RESISTOR CARBON FILM 0.25W 5% 10K
R 32	131 103	RESISTOR CARBON FILM 0.25W 5% 10K
R 33	131 222	RESISTOR CARBON FILM 0.25W 5% 2K2
R 34	136 047	RESISTOR METAL FILM 0.5W 10% 0R47
R 35	131 105	RESISTOR CARBON FILM 0.25W 5% 1MO
R 36	131 103	RESISTOR CARBON FILM 0.25W 5% 10K
R 38	134 183	RESISTOR METAL FILM 0.25W 1% 18K
R 40	134 563	RESISTOR METAL FILM 0.25W 1% 56K
R 41	134 821	RESISTOR METAL FILM 0.25W 1% 820R
R 42	134 241	RESISTOR METAL FILM 0.25W 1% 240R
R 43	131 103	RESISTOR CARBON FILM 0.25W 5% 10K
R 44	131 222	RESISTOR CARBON FILM 0.25W 5% 2K2
R 45	131 222	RESISTOR CARBON FILM 0.25W 5% 2K2
R 46	134 563	RESISTOR METAL FILM 0.25W 1% 56K
R 47	135 470	RESISTOR THICK FILM 0.5W 2% 47R
R 48	135 470	RESISTOR THICK FILM 0.5W 2% 47R
R 49	135 470	RESISTOR THICK FILM 0.5W 2% 47R
R 50	135 470	RESISTOR THICK FILM 0.5W 2% 47R
R 51	135 271	RESISTOR THICK FILM 0.5W 2% 270R
R 52	131 221	RESISTOR CARBON FILM 0.25W 5% 220R
R 53	151 100	RESISTOR WIREWOUND 2.5W 10R
R 54	151 100	RESISTOR WIREWOUND 2.5W 10R
R 55	134 102	RESISTOR METAL FILM 0.25W 1% 1K0
R 56	134 471	RESISTOR METAL FILM 0.25W 1% 470R
R 57	135 220	RESISTOR THICK FILM 0.5W 2% 22R
R 58	131 331	RESISTOR CARBON FILM 0.25W 5% 330R
R 59	131 472	RESISTOR CARBON FILM 0.25W 5% 4K7

COMPONENT LIST 110-0031 PP40 MAINBOARD PCB ASSY ISSUE 9

R 60	131 151	RESISTOR CARBON FILM 0.25W 5% 150R
R 61	131 221	RESISTOR CARBON FILM 0.25W 5% 220R
R 62	134 563	RESISTOR METAL FILM 0.25W 1% 56K
R 63	131 331	RESISTOR CARBON FILM 0.25W 5% 330R
R 64	134 513	RESISTOR METAL FILM 0.25W 1% 51K
R 65	131 103	RESISTOR CARBON FILM 0.25W 5% 10K
R 66	131 102	RESISTOR CARBON FILM 0.25W 5% 1K0
R 67	131 333	RESISTOR CARBON FILM 0.25W 5% 33K
R 68	135 470	RESISTOR THICK FILM 0.5W 2% 47R
R 69	151 100	RESISTOR WIREWOUND 2.5W 10R
R 70	135 271	RESISTOR THICK FILM 0.5W 2% 270R
R 71	131 102	RESISTOR CARBON FILM 0.25W 5% 1K0
R 72	131 102	RESISTOR CARBON FILM 0.25W 5% 1K0
R 73	136 047	RESISTOR METAL FILM 0.5W 10% 0R47
R 74	135 470	RESISTOR THICK FILM 0.5W 2% 47R
R 75	135 470	RESISTOR THICK FILM 0.5W 2% 47R
R 76	135 470	RESISTOR THICK FILM 0.5W 2% 47R
R 77	151 100	RESISTOR WIREWOUND 2.5W 10R
R 78	135 101	RESISTOR THICK FILM 0.5W 2% 100R
R 79	135 101	RESISTOR THICK FILM 0.5W 2% 100R
R 80	135 470	RESISTOR THICK FILM 0.5W 2% 47R
R 81	135 470	RESISTOR THICK FILM 0.5W 2% 47R
R 82	135 470	RESISTOR THICK FILM 0.5W 2% 47R
R 83	135 470	RESISTOR THICK FILM 0.5W 2% 47R
R 84	135 101	RESISTOR THICK FILM 0.5W 2% 100R
R 85	135 101	RESISTOR THICK FILM 0.5W 2% 100R
R 86	135 101	RESISTOR THICK FILM 0.5W 2% 100R
R 87	135 101	RESISTOR THICK FILM 0.5W 2% 100R
R 88	131 682	RESISTOR CARBON FILM 0.25W 5% 6K8
R 89	131 102	RESISTOR CARBON FILM 0.25W 5% 1K0
R 90	135 101	RESISTOR THICK FILM 0.5W 2% 100R
R 91	131 102	RESISTOR CARBON FILM 0.25W 5% 1K0
R 92	131 332	RESISTOR CARBON FILM 0.25W 5% 3K3
R 93	131 221	RESISTOR CARBON FILM 0.25W 5% 220R
R 94	134 822	RESISTOR METAL FILM 0.25W 1% 8K2
R 95	134 473	RESISTOR METAL FILM 0.25W 1% 47K
R 96	134 822	RESISTOR METAL FILM 0.25W 1% 8K2
R 97	131 270	RESISTOR CARBON FILM 0.25W 5% 27R
R 98	131 332	RESISTOR CARBON FILM 0.25W 5% 3K3
R 99	135 101	RESISTOR THICK FILM 0.5W 2% 100R
R 100	135 101	RESISTOR THICK FILM 0.5W 2% 100R
R 101	131 332	RESISTOR CARBON FILM 0.25W 5% 3K3
R 102	131 102	RESISTOR CARBON FILM 0.25W 5% 1K0
R 103	131 102	RESISTOR CARBON FILM 0.25W 5% 1K0
R 104	131 102	RESISTOR CARBON FILM 0.25W 5% 1K0
R 105	131 103	RESISTOR CARBON FILM 0.25W 5% 10K
R 106	131 103	RESISTOR CARBON FILM 0.25W 5% 10K
R 107	134 272	RESISTOR METAL FILM 0.25W 1% 2K7
R 108	131 272	RESISTOR CARBON FILM 0.25W 5% 2K7
R 109	131 561	RESISTOR CARBON FILM 0.25W 5% 560R
R 110	131 271	RESISTOR CARBON FILM 0.25W 5% 270R
R 111	131 682	RESISTOR CARBON FILM 0.25W 5% 6K8
R 112	131 102	RESISTOR CARBON FILM 0.25W 5% 1K0
R 113	131 102	RESISTOR CARBON FILM 0.25W 5% 1K0
R 114	131 102	RESISTOR CARBON FILM 0.25W 5% 1K0
R 115	131 272	RESISTOR CARBON FILM 0.25W 5% 2K7
R 116	131 152	RESISTOR CARBON FILM 0.25W 5% 1K5
R 117	131 332	RESISTOR CARBON FILM 0.25W 5% 3K3
R 118	131 104	RESISTOR CARBON FILM 0.25W 5% 100K
R 119	131 104	RESISTOR CARBON FILM 0.25W 5% 100K
R 120	134 682	RESISTOR METAL FILM 0.25W 1% 6K8
R 121	131 272	RESISTOR CARBON FILM 0.25W 5% 2K7
R 122	131 272	RESISTOR CARBON FILM 0.25W 5% 2K7
R 123	131 561	RESISTOR CARBON FILM 0.25W 5% 560R
R 124	131 271	RESISTOR CARBON FILM 0.25W 5% 270R
R 125	134 682	RESISTOR METAL FILM 0.25W 1% 6K8
R 126	131 272	RESISTOR CARBON FILM 0.25W 5% 2K7
R 127	131 471	RESISTOR CARBON FILM 0.25W 5% 470R
R 128	131 681	RESISTOR CARBON FILM 0.25W 5% 680R
R 129	131 102	RESISTOR CARBON FILM 0.25W 5% 1K0
R 130	131 272	RESISTOR CARBON FILM 0.25W 5% 2K7
R 131	134 682	RESISTOR METAL FILM 0.25W 1% 6K8
R 132	131 561	RESISTOR CARBON FILM 0.25W 5% 560R
R 133	131 682	RESISTOR CARBON FILM 0.25W 5% 6K8
R 134	131 102	RESISTOR CARBON FILM 0.25W 5% 1K0
R 135	135 101	RESISTOR THICK FILM 0.5W 2% 100R
R 136	131 102	RESISTOR CARBON FILM 0.25W 5% 1K0
R 137	131 103	RESISTOR CARBON FILM 0.25W 5% 10K
R 138	134 682	RESISTOR METAL FILM 0.25W 1% 6K8
R 139	131 272	RESISTOR CARBON FILM 0.25W 5% 2K7
R 140	131 272	RESISTOR CARBON FILM 0.25W 5% 2K7
R 141	134 301	RESISTOR METAL FILM 0.25W 1% 300R
R 142	135 101	RESISTOR THICK FILM 0.5W 2% 100R
R 143	131 682	RESISTOR CARBON FILM 0.25W 5% 6K8
R 144	135 271	RESISTOR THICK FILM 0.5W 2% 270R
R 145	131 103	RESISTOR CARBON FILM 0.25W 5% 10K
R 146	131 103	RESISTOR CARBON FILM 0.25W 5% 10K
R 147	135 101	RESISTOR THICK FILM 0.5W 2% 100R
R 148	131 103	RESISTOR CARBON FILM 0.25W 5% 10K
R 149	131 103	RESISTOR CARBON FILM 0.25W 5% 10K
R 150	135 182	RESISTOR THICK FILM 0.5W 2% 1K8
R 151	134 241	RESISTOR METAL FILM 0.25W 1% 240R
R 152	131 272	RESISTOR CARBON FILM 0.25W 5% 2K7
R 153	131 271	RESISTOR CARBON FILM 0.25W 5% 270R
R 154	131 102	RESISTOR CARBON FILM 0.25W 5% 1K0

COMPONENT LIST 110-0031 PP40 MAINBOARD PCB ASSY ISSUE 9

D 1	284 148	DIODE 1N4148
D 2	284 148	DIODE 1N4148
D 3	284 148	DIODE 1N4148
D 4	288 202	DIODE ZENER 1.3W BZX 85 C3V3
D 5	284 148	DIODE 1N4148
D 6	284 148	DIODE 1N4148
D 7	284 148	DIODE 1N4148
D 8	288 107	DIODE ZENER 1.3W BZX 61 C15V
D 9	284 148	DIODE 1N4148
D 10	284 148	DIODE 1N4148
D 11	284 148	DIODE 1N4148
D 12	284 148	DIODE 1N4148
D 13	284 148	DIODE 1N4148
D 14	288 002	DIODE ZENER 0.400W C3V3
D 15	284 148	DIODE 1N4148
D 16	284 148	DIODE 1N4148
D 17	284 148	DIODE 1N4148
D 18	288 002	DIODE ZENER 0.400W C3V3
D 19	284 148	DIODE 1N4148
D 20	284 148	DIODE 1N4148
D 21	284 148	DIODE 1N4148
D 22	284 148	DIODE 1N4148
D 23	288 008	DIODE ZENER 0.400W C5V6
D 24	284 148	DIODE 1N4148
D 25	288 002	DIODE ZENER 0.400W C3V3
D 26	284 148	DIODE 1N4148
D 27	284 148	DIODE 1N4148
D 28	284 148	DIODE 1N4148
D 29	284 148	DIODE 1N4148
D 30	288 002	DIODE ZENER 0.400W C3V3
D 31	284 148	DIODE 1N4148
D 32	284 148	DIODE 1N4148
D 33	284 148	DIODE 1N4148
D 34	284 148	DIODE 1N4148
D 35	284 148	DIODE 1N4148
C 1	123 100	CAP MULTILAYER CERAMIC 0.1uF 50V
C 2	123 100	CAP MULTILAYER CERAMIC 0.1uF 50V
C 3	123 100	CAP MULTILAYER CERAMIC 0.1uF 50V
C 4	123 100	CAP MULTILAYER CERAMIC 0.1uF 50V
C 5	123 100	CAP MULTILAYER CERAMIC 0.1uF 50V
C 6	120 110	CAP RESIN DIPPED TANT 1.5uF 25V
C 7	123 100	CAP MULTILAYER CERAMIC 0.1uF 50V
C 8	124 472	CAP MULTILAYER CERAMIC 4700pF 50V
C 9	123 100	CAP MULTILAYER CERAMIC 0.1uF 50V
C 10	110 007	CAP AL ELEC RADIAL 1uF 63V
C 11	123 100	CAP MULTILAYER CERAMIC 0.1uF 50V
C 12	124 103	CAP MULTILAYER CERAMIC 10000pF 50V
C 13	123 100	CAP MULTILAYER CERAMIC 0.1uF 50V
C 14	124 103	CAP MULTILAYER CERAMIC 10000pF 50V
C 15	124 103	CAP MULTILAYER CERAMIC 10000pF 50V
C 16	126 474	SUPER CAPACITOR 0.47F 5V
C 17	123 100	CAP MULTILAYER CERAMIC 0.1uF 50V
C 18	123 100	CAP MULTILAYER CERAMIC 0.1uF 50V
C 19	123 100	CAP MULTILAYER CERAMIC 0.1uF 50V
C 20	110 007	CAP AL ELEC RADIAL 1uF 63V
C 21	110 007	CAP AL ELEC RADIAL 1uF 63V
C 22	100 332	CAP POLYSTYRENE 1% 3300pf 160V
C 23	124 472	CAP MULTILAYER CERAMIC 4700pF 50V
C 24	110 007	CAP AL ELEC RADIAL 1uF 63V
C 25	123 014	CAP CERAMIC PLATE 10000pF 63V
C 26	124 223	CAP MULTILAYER CERAMIC 22000pF 50V
C 27	124 223	CAP MULTILAYER CERAMIC 22000pF 50V
C 28	123 100	CAP MULTILAYER CERAMIC 0.1uF 50V
C 29	123 002	CAP CERAMIC PLATE 47pF 63V
C 30	123 004	CAP CERAMIC PLATE 100pF 63V
C 31	123 100	CAP MULTILAYER CERAMIC 0.1uF 50V
C 32	123 008	CAP CERAMIC PLATE 680pF 63V
C 33	123 007	CAP CERAMIC PLATE 330pF 63V
C 34	123 007	CAP CERAMIC PLATE 330pF 63V
C 35	123 004	CAP CERAMIC PLATE 100pF 63V
C 36	123 002	CAP CERAMIC PLATE 47pF 63V
C 37	123 002	CAP CERAMIC PLATE 47pF 63V
C 38	123 100	CAP MULTILAYER CERAMIC 0.1uF 50V
C 39	124 222	CAP MULTILAYER CERAMIC 2200pF 50V
C 40	123 100	CAP MULTILAYER CERAMIC 0.1uF 50V
C 41	124 103	CAP MULTILAYER CERAMIC 10000pF 50V
C 42	110 007	CAP AL ELEC RADIAL 1uF 63V
C 43	124 472	CAP MULTILAYER CERAMIC 4700pF 50V
C 44	123 100	CAP MULTILAYER CERAMIC 0.1uF 50V
C 45	124 103	CAP MULTILAYER CERAMIC 10000pF 50V
C 46	110 007	CAP AL ELEC RADIAL 1uF 63V
C 47	123 002	CAP CERAMIC PLATE 47pF 63V
C 48	123 100	CAP MULTILAYER CERAMIC 0.1uF 50V
C 49	123 100	CAP MULTILAYER CERAMIC 0.1uF 50V
C 50	123 004	CAP CERAMIC PLATE 100pF 63V
C 51	123 008	CAP CERAMIC PLATE 680pF 63V
C 52	123 007	CAP CERAMIC PLATE 330pF 63V
C 53	123 007	CAP CERAMIC PLATE 330pF 63V
C 54	123 100	CAP MULTILAYER CERAMIC 0.1uF 50V
C 55	123 100	CAP MULTILAYER CERAMIC 0.1uF 50V
C 56	123 002	CAP CERAMIC PLATE 47pF 63V
C 57	124 222	CAP MULTILAYER CERAMIC 2200pF 50V
C 58	110 047	CAP AL ELEC RADIAL 1uF 63V L/PROF
C 59	124 223	CAP MULTILAYER CERAMIC 22000pF 50V
C 60	120 102	CAP RESIN DIPPED TANT 10uF 35V

COMPONENT LIST 110-0031 PP40 MAINBOARD PCB ASSY ISSUE 9

C 61	120 102	CAP RESIN DIPPED TANT 10uF 35V
C 62	120 102	CAP RESIN DIPPED TANT 10uF 35V
M 1	110-0032	PP40 MAINBOARD PCB
M 2	434 004	PIEZO ALARM PKB8-4AO
M 3	400 060	SOLDER PIN D/S
M 4	400 060	SOLDER PIN D/S
M 5	400 060	SOLDER PIN D/S
M 6	400 060	SOLDER PIN D/S
M 7	400 060	SOLDER PIN D/S
M 8	400 060	SOLDER PIN D/S
M 9	400 060	SOLDER PIN D/S
M 10	400 060	SOLDER PIN D/S
M 11	400 060	SOLDER PIN D/S
M 12	400 060	SOLDER PIN D/S
M 13	318 264	IC 2764 EPROM 64K 250nS
M 14	110-0018	PP40 CABLELOOM ASSY
M 15	400 051	CABLE SLEEVE H20
M 16	400 051	CABLE SLEEVE H20
M 17	400 051	CABLE SLEEVE H20
M 18	400 051	CABLE SLEEVE H20
M 19	400 051	CABLE SLEEVE H20
M 20	400 051	CABLE SLEEVE H20
M 21	400 051	CABLE SLEEVE H20
M 22	400 051	CABLE SLEEVE H20
M 23	400 051	CABLE SLEEVE H20
M 24	400 051	CABLE SLEEVE H20

ITEMS LIST 110-0004 PP40 COVER MOULDING ASSY ISSUE 1

ITEM	PART NO.	NO. OFF	
1	100-0050	PP39 COVER MOULDING	1
3	110-0056	PP40 MEMBRANE PANEL	1
4	110-0058	LABEL PP40 GANG PROGRAMMER	1
5	100-0055	PP39 FILTER	1

ITEMS LIST 111-0004 PP41 COVER MOULDING ASSY ISSUE 1

ITEM	PART NO.	NO. OFF	
1	100-0050	PP39 COVER MOULDING	1
3	112-0056	MEMBRANE PANEL PP42	1
4	111-0058	LABEL PP41 MOS GANG PROGRAMMER	1
5	100-0055	PP39 FILTER	1

ITEMS LIST 112-0004 PP42 COVER MOULDING ASSY ISSUE 1

ITEM	PART NO.	NO. OFF	
1	100-0050	PP39 COVER MOULDING	1
3	112-0056	MEMBRANE PANEL PP42	1
4	112-0058	LABEL PP42 MOS SET PROGRAMMER	1
5	100-0055	PP39 FILTER	1

ITEMS LIST 22-0004 ZL33 COVER MOULDING ASSY ISSUE 1

ITEM	PART NO.	NO. OFF	
1	100-0050	PP39 COVER MOULDING	1
3	22-0056	ZL33 MEMBRANE PANEL	1
4	22-0058	LABEL ZL33 MOS LOGIC PROGRAMMER	1
5	100-0055	PP39 FILTER	1

ITEMS LIST 110-0003 PP40 BASE (240V) ASSY ISSUE 7

ITEM	PART NO.	NO. OFF	
1	110-0013	PP40 BASE SCREENED	1
2	110-0011	PP40 PSU	1
3	110-0055	PP40 INSULATION PANEL	1
4	110-0054	PP40 BLANKING PLATE	1
5	670 103	FAN ETRI 115V 99XM-01-82000	1
6	620 003	CABLE & PLUG for ETRI SERIES 99 FAN	1
8	462 025	MAINS CONNECTOR BL 2723	1
9	400 041	FUSE CERAMIC 20mm QUICK BLOW 2 AMP	2
10	400 051	CABLE SLEEVE H20	11
11	400 049	CABLE TIE TYB 23M	1
12	400 099	SMALL BUMP-ON FOOT 3M SJ5008	2
13	400 100	LARGE BLACK BUMP-ON FOOT 3M SJ5017	2
14	400 032	SOLDER TAG 4BA	2
15	800 002	2 INCH D/SIDED TAPE LINEN	1
16	800 007	CYANOACRYLATE ADHESIVE	1
18	432 100	SCREW PANHEAD SUPA STEEL M3 X 6	5
19	432 101	SCREW PANHEAD SUPA STEEL M3 X 8	1
20	432 102	SCREW PANHEAD SUPA STEEL M3 X 10	3
21	432 113	SCREW C/SUNK SUPA STEEL M3 X 12	3
22	432 190	FULLNUT STEEL ZINC & CLEAR M3	6
23	432 192	WASHER SHAKEPROOF M3	13
24	433 091	WASHER PLASTIC M3	3
29	465 002	4BA EARTH TAG	2
31	680 009	WIRE RED 24/0.2	1
32	680 021	WIRE BLUE 24/0.2	1
33	680 031	PVC EQUIP WIRE 24/0.2 GREEN/YELLOW	1
34	680 026	PVC EQUIP WIRE TYPE 2 BROWN 24/0.2M	1
35	432 195	WASHER CRINKLE M3 (BERRILLIUM CU)	5

ITEMS LIST 111-0003 PP41 BASE (240V) ASSY ISSUE 6

ITEM	PART NO.		NO. OFF
1	110-0013	PP40 BASE SCREENED	1
2	110-0011	PP40 PSU	1
3	110-0055	PP40 INSULATION PANEL	1
4	110-0067	PP40 FEMALE C/FORM ASSY	1
5	670 103	FAN ETRI 115V 99XM-01-82000	1
6	620 003	CABLE & PLUG for ETRI SERIES 99 FAN	1
7	110-0066	PP40 MALE C/FORM ASSY	1
8	462 025	MAINS CONNECTOR BL 2723	1
9	400 041	FUSE CERAMIC 20mm QUICK BLOW 2 AMP	2
10	400 051	CABLE SLEEVE H20	11
11	400 049	CABLE TIE TYB 23M	1
12	400 099	SMALL BUMP-ON FOOT 3M SJ5008	2
13	400 100	LARGE BLACK BUMP-ON FOOT 3M SJ5017	2
14	400 032	SOLDER TAG 4BA	2
15	800 002	2 INCH D/SIDED TAPE LINEN	1
16	800 007	CYANOACRYLATE ADHESIVE	1
18	432 100	SCREW PANHEAD SUPA STEEL M3 X 6	5
19	432 101	SCREW PANHEAD SUPA STEEL M3 X 8	5
20	432 102	SCREW PANHEAD SUPA STEEL M3 X 10	1
21	432 113	SCREW C/SUNK SUPA STEEL M3 X 12	3
22	432 190	FULLNUT STEEL ZINC & CLEAR M3	4
23	432 192	WASHER SHAKEPROOF M3	13
24	433 091	WASHER PLASTIC M3	3
29	465 002	4BA EARTH TAG	2
31	680 009	WIRE RED 24/0.2	1
32	680 021	WIRE BLUE 24/0.2	1
33	680 031	PVC EQUIP WIRE 24/0.2 GREEN/YELLOW	1
34	680 026	PVC EQUIP WIRE TYPE 2 BROWN 24/0.2M	1
35	432 195	WASHER CRINKLE M3 (BERRILLIUM CU)	5

COMPONENT LIST 110-0181 PP40 RAM 0.5Mb I/O PCB ASSY ISSUE 1

CON 1	464 023	R ANGLE LOW PROFILE HEADER 26 WAY
CON 2	464 023	R ANGLE LOW PROFILE HEADER 26 WAY
CON 3	462 101	CONNECTOR DIN MALE 64 WAY
IC 1	315 489	IC SN75189 BUFFER
IC 2	315 488	IC SN75188 BUFFER
IC 3	315 489	IC SN75189 BUFFER
IC 4	315 488	IC SN75188 BUFFER
IC 5	317 164	IC M5K4164AP 64K DRAM PIN1 REFRESH
IC 7	320 661	IC SY2661-2 UART
IC 8	320 661	IC SY2661-2 UART
IC 9	317 164	IC M5K4164AP 64K DRAM PIN1 REFRESH
IC 11	110-0190	PPZ ASSY
IC 12	317 164	IC M5K4164AP 64K DRAM PIN1 REFRESH
IC 14	311 000	IC 74ALS00 QUAD 2 IN NAND GATE
IC 15	308 008	CRYSTAL OSCILLATOR 4.9152MHz
IC 16	311 241	IC 74ALS241 OCT BUS/LINE DRIV S ST
IC 17	317 164	IC M5K4164AP 64K DRAM PIN1 REFRESH
IC 19	311 241	IC 74ALS241 OCT BUS/LINE DRIV S ST
IC 20	317 164	IC M5K4164AP 64K DRAM PIN1 REFRESH
IC 22	313 273	IC 74LS273 OCT D FLIP FLOP/CLEAR
IC 24	317 164	IC M5K4164AP 64K DRAM PIN1 REFRESH
IC 26	311 241	IC 74ALS241 OCT BUS/LINE DRIV S ST
IC 27	317 164	IC M5K4164AP 64K DRAM PIN1 REFRESH
IC 29	110-0192	PPZ ASSY
IC 30	311 241	IC 74ALS241 OCT BUS/LINE DRIV S ST
IC 31	317 164	IC M5K4164AP 64K DRAM PIN1 REFRESH
RN 1	173 472	RESISTOR NETWORK SIL 9pin 8rs 4K7
R 1	131 103	RESISTOR CARBON FILM 0.25W 5% 10K
R 2	131 103	RESISTOR CARBON FILM 0.25W 5% 10K
C 1	123 100	CAP MULTILAYER CERAMIC 0.1uF 50V
C 2	123 011	CAP CERAMIC PLATE 470pF 63V
C 3	123 011	CAP CERAMIC PLATE 470pF 63V
C 4	123 011	CAP CERAMIC PLATE 470pF 63V
C 5	123 100	CAP MULTILAYER CERAMIC 0.1uF 50V
C 6	123 100	CAP MULTILAYER CERAMIC 0.1uF 50V
C 7	123 100	CAP MULTILAYER CERAMIC 0.1uF 50V
C 8	123 100	CAP MULTILAYER CERAMIC 0.1uF 50V
C 9	123 100	CAP MULTILAYER CERAMIC 0.1uF 50V
C 10	123 011	CAP CERAMIC PLATE 470pF 63V
C 11	123 100	CAP MULTILAYER CERAMIC 0.1uF 50V
C 12	123 100	CAP MULTILAYER CERAMIC 0.1uF 50V
C 13	123 100	CAP MULTILAYER CERAMIC 0.1uF 50V
C 14	123 011	CAP CERAMIC PLATE 470pF 63V
C 15	123 100	CAP MULTILAYER CERAMIC 0.1uF 50V
C 16	123 100	CAP MULTILAYER CERAMIC 0.1uF 50V
C 17	123 100	CAP MULTILAYER CERAMIC 0.1uF 50V
C 18	123 011	CAP CERAMIC PLATE 470pF 63V
C 19	123 100	CAP MULTILAYER CERAMIC 0.1uF 50V
C 20	123 100	CAP MULTILAYER CERAMIC 0.1uF 50V
C 21	123 100	CAP MULTILAYER CERAMIC 0.1uF 50V
C 22	123 011	CAP CERAMIC PLATE 470pF 63V
C 23	123 011	CAP CERAMIC PLATE 470pF 63V
C 24	123 100	CAP MULTILAYER CERAMIC 0.1uF 50V
C 25	123 100	CAP MULTILAYER CERAMIC 0.1uF 50V
C 26	123 100	CAP MULTILAYER CERAMIC 0.1uF 50V
C 27	123 100	CAP MULTILAYER CERAMIC 0.1uF 50V
C 28	123 100	CAP MULTILAYER CERAMIC 0.1uF 50V
C 29	123 100	CAP MULTILAYER CERAMIC 0.1uF 50V
C 30	123 100	CAP MULTILAYER CERAMIC 0.1uF 50V
C 31	123 100	CAP MULTILAYER CERAMIC 0.1uF 50V

COMPONENT LIST 110-0181 PP40 RAM 0.5Mb I/O PCB ASSY ISSUE 1

C 32	123 100	CAP MULTILAYER CERAMIC 0.1uF 50V
M 1	110-0182	PP40 RAM I/O PCB

COMPONENT LIST 110-0201 PP40 RAM 1Mb I/O PCB ASSY ISSUE 2

CON 1	464 023	R ANGLE LOW PROFILE HEADER 26 WAY
CON 2	464 023	R ANGLE LOW PROFILE HEADER 26 WAY
CON 3	462 101	CONNECTOR DIN MALE 64 WAY
IC 1	315 489	IC SN75189 BUFFER
IC 2	315 488	IC SN75188 BUFFER
IC 3	315 489	IC SN75189 BUFFER
IC 4	315 488	IC SN75188 BUFFER
IC 5	317 164	IC M5K4164AP 64K DRAM PIN1 REFRESH
IC 6	317 164	IC M5K4164AP 64K DRAM PIN1 REFRESH
IC 7	320 661	IC SY2661-2 UART
IC 8	320 661	IC SY2661-2 UART
IC 9	317 164	IC M5K4164AP 64K DRAM PIN1 REFRESH
IC 10	317 164	IC M5K4164AP 64K DRAM PIN1 REFRESH
IC 11	110-0190	PPZ ASSY
IC 12	317 164	IC M5K4164AP 64K DRAM PIN1 REFRESH
IC 13	317 164	IC M5K4164AP 64K DRAM PIN1 REFRESH
IC 14	311 000	IC 74ALS00 QUAD 2 IN NAND GATE
IC 15	308 008	CRYSTAL OSCILLATOR 4.9152MHz
IC 16	311 241	IC 74ALS241 OCT BUS/LINE DRIV S ST
IC 17	317 164	IC M5K4164AP 64K DRAM PIN1 REFRESH
IC 18	317 164	IC M5K4164AP 64K DRAM PIN1 REFRESH
IC 19	311 241	IC 74ALS241 OCT BUS/LINE DRIV S ST
IC 20	317 164	IC M5K4164AP 64K DRAM PIN1 REFRESH
IC 21	317 164	IC M5K4164AP 64K DRAM PIN1 REFRESH
IC 22	313 273	IC 74LS273 OCT D FLIP FLOP/CLEAR
IC 23	311 241	IC 74ALS241 OCT BUS/LINE DRIV S ST
IC 24	317 164	IC M5K4164AP 64K DRAM PIN1 REFRESH
IC 25	317 164	IC M5K4164AP 64K DRAM PIN1 REFRESH
IC 26	311 241	IC 74ALS241 OCT BUS/LINE DRIV S ST
IC 27	317 164	IC M5K4164AP 64K DRAM PIN1 REFRESH
IC 28	317 164	IC M5K4164AP 64K DRAM PIN1 REFRESH
IC 29	110-0211	PPZ ASSY
IC 30	311 241	IC 74ALS241 OCT BUS/LINE DRIV S ST
IC 31	317 164	IC M5K4164AP 64K DRAM PIN1 REFRESH
IC 32	317 164	IC M5K4164AP 64K DRAM PIN1 REFRESH
RN 1	173 472	RESISTOR NETWORK SIL 9pin 8rs 4K7
R 1	131 103	RESISTOR CARBON FILM 0.25W 5% 10K
R 2	131 103	RESISTOR CARBON FILM 0.25W 5% 10K
C 1	123 100	CAP MULTILAYER CERAMIC 0.1uF 50V
C 2	123 011	CAP CERAMIC PLATE 470pF 63V
C 3	123 011	CAP CERAMIC PLATE 470pF 63V
C 4	123 011	CAP CERAMIC PLATE 470pF 63V
C 5	123 100	CAP MULTILAYER CERAMIC 0.1uF 50V
C 6	123 100	CAP MULTILAYER CERAMIC 0.1uF 50V
C 7	123 100	CAP MULTILAYER CERAMIC 0.1uF 50V
C 8	123 100	CAP MULTILAYER CERAMIC 0.1uF 50V
C 9	123 100	CAP MULTILAYER CERAMIC 0.1uF 50V
C 10	123 011	CAP CERAMIC PLATE 470pF 63V
C 11	123 100	CAP MULTILAYER CERAMIC 0.1uF 50V
C 12	123 100	CAP MULTILAYER CERAMIC 0.1uF 50V
C 13	123 100	CAP MULTILAYER CERAMIC 0.1uF 50V
C 14	123 011	CAP CERAMIC PLATE 470pF 63V
C 15	123 100	CAP MULTILAYER CERAMIC 0.1uF 50V
C 16	123 100	CAP MULTILAYER CERAMIC 0.1uF 50V
C 17	123 100	CAP MULTILAYER CERAMIC 0.1uF 50V
C 18	123 011	CAP CERAMIC PLATE 470pF 63V
C 19	123 100	CAP MULTILAYER CERAMIC 0.1uF 50V
C 20	123 100	CAP MULTILAYER CERAMIC 0.1uF 50V
C 21	123 100	CAP MULTILAYER CERAMIC 0.1uF 50V
C 22	123 011	CAP CERAMIC PLATE 470pF 63V
C 23	123 011	CAP CERAMIC PLATE 470pF 63V
C 24	123 100	CAP MULTILAYER CERAMIC 0.1uF 50V
C 25	123 100	CAP MULTILAYER CERAMIC 0.1uF 50V
C 26	123 100	CAP MULTILAYER CERAMIC 0.1uF 50V
C 27	123 100	CAP MULTILAYER CERAMIC 0.1uF 50V
C 28	123 100	CAP MULTILAYER CERAMIC 0.1uF 50V
C 29	123 100	CAP MULTILAYER CERAMIC 0.1uF 50V
C 30	123 100	CAP MULTILAYER CERAMIC 0.1uF 50V
C 31	123 100	CAP MULTILAYER CERAMIC 0.1uF 50V
C 32	123 100	CAP MULTILAYER CERAMIC 0.1uF 50V
M 1	110-0182	PP40 RAM I/O PCB

COMPONENT LIST 110-0331 PP40 2Mb RAM PCB ASSY (NEW ISS) ISSUE 5

CON 1	464 023	R ANGLE LOW PROFILE HEADER 26 WAY
CON 2	464 023	R ANGLE LOW PROFILE HEADER 26 WAY
CON 3	462 101	CONNECTOR DIN MALE 64 WAY
IC 1	315 489	IC SN75189 BUFFER
IC 2	315 488	IC SN75188 BUFFER
IC 3	315 489	IC SN75189 BUFFER
IC 4	315 488	IC SN75188 BUFFER
IC 7	320 661	IC SY2661-2 UART
IC 8	320 661	IC SY2661-2 UART
IC 11	110-0191	FPLA 319 153 2Mb 40RAM IC11
IC 14	311 000	IC 74ALS00 QUAD 2 IN NAND GATE
IC 15	308 008	CRYSTAL OSCILLATOR 4.9152MHz
IC 16	312 241	IC 74F241 OCT BUS/LINE DRIVER
IC 19	312 241	IC 74F241 OCT BUS/LINE DRIVER

COMPONENT LIST 110-0331 PP40 2Mb RAM PCB ASSY (NEW ISS) ISSUE 5

IC 22	313 273	IC 74LS273 OCT D FLIP FLOP/CLEAR
IC 26	312 241	IC 74F241 OCT BUS/LINE DRIVER
IC 29	110-0231	FPLA 319 153 2Mb 40RAM PCB IC29
IC 30	312 241	IC 74F241 OCT BUS/LINE DRIVER
IC 41	317 4256	IC HM514256 256K x 4 DRAM 150nS
IC 43	317 4256	IC HM514256 256K x 4 DRAM 150nS
RN 1	173 103	RESISTOR NETWORK SIL 9pin 8rs 10K
R 1	131 103	RESISTOR CARBON FILM 0.25W 5% 10K
R 2	131 103	RESISTOR CARBON FILM 0.25W 5% 10K
C 1	123 100	CAP MULTILAYER CERAMIC 0.1uF 50V
C 2	123 011	CAP CERAMIC PLATE 470pF 63V
C 3	123 011	CAP CERAMIC PLATE 470pF 63V
C 4	123 011	CAP CERAMIC PLATE 470pF 63V
C 5	123 474	CAP MULTILAYER CERAMIC 0.47uF 50V
C 7	123 100	CAP MULTILAYER CERAMIC 0.1uF 50V
C 8	123 100	CAP MULTILAYER CERAMIC 0.1uF 50V
C 9	123 474	CAP MULTILAYER CERAMIC 0.47uF 50V
C 10	123 011	CAP CERAMIC PLATE 470pF 63V
C 12	123 100	CAP MULTILAYER CERAMIC 0.1uF 50V
C 13	123 100	CAP MULTILAYER CERAMIC 0.1uF 50V
C 14	123 011	CAP CERAMIC PLATE 470pF 63V
C 16	123 100	CAP MULTILAYER CERAMIC 0.1uF 50V
C 17	123 100	CAP MULTILAYER CERAMIC 0.1uF 50V
C 18	123 011	CAP CERAMIC PLATE 470pF 63V
C 19	123 100	CAP MULTILAYER CERAMIC 0.1uF 50V
C 20	123 100	CAP MULTILAYER CERAMIC 0.1uF 50V
C 21	123 100	CAP MULTILAYER CERAMIC 0.1uF 50V
C 22	123 011	CAP CERAMIC PLATE 470pF 63V
C 23	123 011	CAP CERAMIC PLATE 470pF 63V
C 24	123 100	CAP MULTILAYER CERAMIC 0.1uF 50V
C 25	123 474	CAP MULTILAYER CERAMIC 0.47uF 50V
C 26	123 100	CAP MULTILAYER CERAMIC 0.1uF 50V
C 27	110 043	CAP AL ELEC AXIAL 47uF 10V
C 28	110 043	CAP AL ELEC AXIAL 47uF 10V
C 29	123 474	CAP MULTILAYER CERAMIC 0.47uF 50V
C 30	110 043	CAP AL ELEC AXIAL 47uF 10V
C 31	123 100	CAP MULTILAYER CERAMIC 0.1uF 50V
M 1	110-0342	PP40 2Mb/4Mb RAM PCB (NEW ISS)

COMPONENT LIST 110-0341 PP40 4Mb RAM PCB ASSY (NEW ISS) ISSUE 4

CON 1	464 023	R ANGLE LOW PROFILE HEADER 26 WAY
CON 2	464 023	R ANGLE LOW PROFILE HEADER 26 WAY
CON 3	462 101	CONNECTOR DIN MALE 64 WAY
IC 1	315 489	IC SN75189 BUFFER
IC 2	315 488	IC SN75188 BUFFER
IC 3	315 489	IC SN75189 BUFFER
IC 4	315 488	IC SN75188 BUFFER
IC 7	320 661	IC SY2661-2 UART
IC 8	320 661	IC SY2661-2 UART
IC 11	110-0191	FPLA 319 153 2Mb 40RAM IC11
IC 14	311 000	IC 74ALS00 QUAD 2 IN NAND GATE
IC 15	308 008	CRYSTAL OSCILLATOR 4.9152MHz
IC 16	312 241	IC 74F241 OCT BUS/LINE DRIVER
IC 19	312 241	IC 74F241 OCT BUS/LINE DRIVER
IC 22	313 273	IC 74LS273 OCT D FLIP FLOP/CLEAR
IC 23	312 241	IC 74F241 OCT BUS/LINE DRIVER
IC 26	312 241	IC 74F241 OCT BUS/LINE DRIVER
IC 29	110-0251	FPLA 319 153 4Mb 40RAM PCB IC29
IC 30	312 241	IC 74F241 OCT BUS/LINE DRIVER
IC 41	317 4256	IC HM514256 256K x 4 DRAM 150nS
IC 42	317 4256	IC HM514256 256K x 4 DRAM 150nS
IC 43	317 4256	IC HM514256 256K x 4 DRAM 150nS
IC 44	317 4256	IC HM514256 256K x 4 DRAM 150nS
RN 1	173 103	RESISTOR NETWORK SIL 9pin 8rs 10K
R 1	131 103	RESISTOR CARBON FILM 0.25W 5% 10K
R 2	131 103	RESISTOR CARBON FILM 0.25W 5% 10K
C 1	123 100	CAP MULTILAYER CERAMIC 0.1uF 50V
C 2	123 011	CAP CERAMIC PLATE 470pF 63V
C 3	123 011	CAP CERAMIC PLATE 470pF 63V
C 4	123 011	CAP CERAMIC PLATE 470pF 63V
C 5	123 474	CAP MULTILAYER CERAMIC 0.47uF 50V
C 7	123 100	CAP MULTILAYER CERAMIC 0.1uF 50V
C 8	123 100	CAP MULTILAYER CERAMIC 0.1uF 50V
C 9	123 474	CAP MULTILAYER CERAMIC 0.47uF 50V
C 10	123 011	CAP CERAMIC PLATE 470pF 63V
C 12	123 100	CAP MULTILAYER CERAMIC 0.1uF 50V
C 13	123 100	CAP MULTILAYER CERAMIC 0.1uF 50V
C 14	123 011	CAP CERAMIC PLATE 470pF 63V
C 16	123 100	CAP MULTILAYER CERAMIC 0.1uF 50V
C 17	123 100	CAP MULTILAYER CERAMIC 0.1uF 50V
C 18	123 011	CAP CERAMIC PLATE 470pF 63V
C 19	123 100	CAP MULTILAYER CERAMIC 0.1uF 50V
C 20	123 100	CAP MULTILAYER CERAMIC 0.1uF 50V
C 21	123 100	CAP MULTILAYER CERAMIC 0.1uF 50V
C 22	123 011	CAP CERAMIC PLATE 470pF 63V
C 23	123 011	CAP CERAMIC PLATE 470pF 63V
C 24	123 100	CAP MULTILAYER CERAMIC 0.1uF 50V
C 25	123 474	CAP MULTILAYER CERAMIC 0.47uF 50V
C 26	123 100	CAP MULTILAYER CERAMIC 0.1uF 50V
C 27	110 043	CAP AL ELEC AXIAL 47uF 10V
C 28	110 043	CAP AL ELEC AXIAL 47uF 10V
C 29	123 474	CAP MULTILAYER CERAMIC 0.47uF 50V
C 30	110 043	CAP AL ELEC AXIAL 47uF 10V

COMPONENT LIST 110-0341 PP40 4Mb RAM PCB ASSY (NEW ISS) ISSUE 4

C 31	123 100	CAP MULTILAYER CERAMIC 0.1uF 50V
M 1	110-0342	PP40 2Mb/4Mb RAM PCB (NEW ISS)

COMPONENT LIST 110-0281 PP40 8Mb RAM PCB ASSY ISSUE 2

CON 1	464 023	R ANGLE LOW PROFILE HEADER 26 WAY
CON 2	464 023	R ANGLE LOW PROFILE HEADER 26 WAY
CON 3	462 101	CONNECTOR DIN MALE 64 WAY
IC 1	315 488	IC SN75188 BUFFER
IC 2	315 489	IC SN75189 BUFFER
IC 3	315 488	IC SN75188 BUFFER
IC 4	315 489	IC SN75189 BUFFER
IC 5	110-0265	FPLA 319 153 8/16Mb 40RAM PCB IC5
IC 6	308 008	CRYSTAL OSCILLATOR 4.9152MHz
IC 7	110-0286	FPLA 319 153 8Mb 40RAM PCB IC7
IC 8	2320 661	IC 2661-2 UART PLCC
IC 9	2320 661	IC 2661-2 UART PLCC
IC 10	1317 105	IC 511000J 1Mb DRAM 100nS S.O.
IC 11	1317 105	IC 511000J 1Mb DRAM 100nS S.O.
IC 12	1317 105	IC 511000J 1Mb DRAM 100nS S.O.
IC 13	1317 105	IC 511000J 1Mb DRAM 100nS S.O.
IC 14	1317 105	IC 511000J 1Mb DRAM 100nS S.O.
IC 15	1317 105	IC 511000J 1Mb DRAM 100nS S.O.
IC 16	1317 105	IC 511000J 1Mb DRAM 100nS S.O.
IC 17	1317 105	IC 511000J 1Mb DRAM 100nS S.O.
IC 18	1312 241	IC 74F241 OCT BUFF BUS DRIVE S.O.
IC 19	1312 241	IC 74F241 OCT BUFF BUS DRIVE S.O.
IC 20	1312 241	IC 74F241 OCT BUFF BUS DRIVE S.O.
IC 21	1312 241	IC 74F241 OCT BUFF BUS DRIVE S.O.
IC 23	1311 273	IC 74ALS273 OCTAL FF D/CLEAR S.O.
RN 1	173 472	RESISTOR NETWORK SIL 9pin 8rs 4K7
R 1	1138 103	CHIP RESISTOR 1/8W 5% 10K
R 2	1138 103	CHIP RESISTOR 1/8W 5% 10K
C 1	110 043	CAP AL ELEC AXIAL 47uF 10V
C 2	110 043	CAP AL ELEC AXIAL 47uF 10V
C 3	1123 011	CHIP CAP CERAMIC PLATE 470pF 63V
C 4	1123 011	CHIP CAP CERAMIC PLATE 470pF 63V
C 5	1123 011	CHIP CAP CERAMIC PLATE 470pF 63V
C 6	1123 011	CHIP CAP CERAMIC PLATE 470pF 63V
C 7	1123 011	CHIP CAP CERAMIC PLATE 470pF 63V
C 8	1123 011	CHIP CAP CERAMIC PLATE 470pF 63V
C 9	121 104	CHIP CAPACITOR 100000pF 50V
C 10	121 104	CHIP CAPACITOR 100000pF 50V
C 11	1123 011	CHIP CAP CERAMIC PLATE 470pF 63V
C 12	1123 011	CHIP CAP CERAMIC PLATE 470pF 63V
C 13	121 104	CHIP CAPACITOR 100000pF 50V
C 14	121 104	CHIP CAPACITOR 100000pF 50V
C 15	121 104	CHIP CAPACITOR 100000pF 50V
C 16	121 104	CHIP CAPACITOR 100000pF 50V
C 17	121 104	CHIP CAPACITOR 100000pF 50V
C 18	121 104	CHIP CAPACITOR 100000pF 50V
C 19	121 104	CHIP CAPACITOR 100000pF 50V
C 20	121 104	CHIP CAPACITOR 100000pF 50V
C 21	121 104	CHIP CAPACITOR 100000pF 50V
C 22	121 104	CHIP CAPACITOR 100000pF 50V
C 23	121 104	CHIP CAPACITOR 100000pF 50V
C 24	121 104	CHIP CAPACITOR 100000pF 50V
C 25	121 104	CHIP CAPACITOR 100000pF 50V
C 26	121 104	CHIP CAPACITOR 100000pF 50V
C 27	121 104	CHIP CAPACITOR 100000pF 50V
C 28	121 104	CHIP CAPACITOR 100000pF 50V
C 29	121 104	CHIP CAPACITOR 100000pF 50V
C 30	121 104	CHIP CAPACITOR 100000pF 50V
C 31	121 104	CHIP CAPACITOR 100000pF 50V
C 32	121 104	CHIP CAPACITOR 100000pF 50V
C 33	121 104	CHIP CAPACITOR 100000pF 50V
C 34	121 104	CHIP CAPACITOR 100000pF 50V
C 35	121 104	CHIP CAPACITOR 100000pF 50V
C 36	121 104	CHIP CAPACITOR 100000pF 50V
C 37	121 104	CHIP CAPACITOR 100000pF 50V
C 38	121 104	CHIP CAPACITOR 100000pF 50V
C 39	121 104	CHIP CAPACITOR 100000pF 50V
C 40	121 104	CHIP CAPACITOR 100000pF 50V
M 1	110-0262	PP40 8/16Mb RAM PCB (80-0022)

COMPONENT LIST 110-0261 PP40 16Mb RAM PCB ASSY ISSUE 2

CON 1	464 023	R ANGLE LOW PROFILE HEADER 26 WAY
CON 2	464 023	R ANGLE LOW PROFILE HEADER 26 WAY
CON 3	462 101	CONNECTOR DIN MALE 64 WAY
IC 1	315 488	IC SN75188 BUFFER
IC 2	315 489	IC SN75189 BUFFER
IC 3	315 488	IC SN75188 BUFFER
IC 4	315 489	IC SN75189 BUFFER
IC 5	110-0265	FPLA 319 153 8/16Mb 40RAM PCB IC5
IC 6	308 008	CRYSTAL OSCILLATOR 4.9152MHz
IC 7	110-0266	FPLA 319 153 16Mb 40RAM PCB IC7
IC 8	2320 661	IC 2661-2 UART PLCC
IC 9	2320 661	IC 2661-2 UART PLCC
IC 10	1317 105	IC 511000J 1Mb DRAM 100nS S.O.
IC 11	1317 105	IC 511000J 1Mb DRAM 100nS S.O.
IC 12	1317 105	IC 511000J 1Mb DRAM 100nS S.O.
IC 13	1317 105	IC 511000J 1Mb DRAM 100nS S.O.

COMPONENT LIST 110-0261 PP40 16Mb RAM PCB ASSY ISSUE 2

IC 14	1317 105	IC 511000J 1Mb DRAM 100nS S.O.
IC 15	1317 105	IC 511000J 1Mb DRAM 100nS S.O.
IC 16	1317 105	IC 511000J 1Mb DRAM 100nS S.O.
IC 17	1317 105	IC 511000J 1Mb DRAM 100nS S.O.
IC 18	1312 241	IC 74F241 OCT BUFF BUS DRIVE S.O.
IC 19	1312 241	IC 74F241 OCT BUFF BUS DRIVE S.O.
IC 20	1312 241	IC 74F241 OCT BUFF BUS DRIVE S.O.
IC 21	1312 241	IC 74F241 OCT BUFF BUS DRIVE S.O.
IC 22	1312 241	IC 74F241 OCT BUFF BUS DRIVE S.O.
IC 23	1311 273	IC 74ALS273 OCTAL FF D/CLEAR S.O.
IC 24	1317 105	IC 511000J 1Mb DRAM 100nS S.O.
IC 25	1317 105	IC 511000J 1Mb DRAM 100nS S.O.
IC 26	1317 105	IC 511000J 1Mb DRAM 100nS S.O.
IC 27	1317 105	IC 511000J 1Mb DRAM 100nS S.O.
IC 28	1317 105	IC 511000J 1Mb DRAM 100nS S.O.
IC 29	1317 105	IC 511000J 1Mb DRAM 100nS S.O.
IC 30	1317 105	IC 511000J 1Mb DRAM 100nS S.O.
IC 31	1317 105	IC 511000J 1Mb DRAM 100nS S.O.
RN 1	173 472	RESISTOR NETWORK SIL 9pin 8rs 4K7
R 1	1138 103	CHIP RESISTOR 1/8W 5% 10K
R 2	1138 103	CHIP RESISTOR 1/8W 5% 10K
C 1	110 043	CAP AL ELEC AXIAL 47uF 10V
C 2	110 043	CAP AL ELEC AXIAL 47uF 10V
C 3	1123 011	CHIP CAP CERAMIC PLATE 470pF 63V
C 4	1123 011	CHIP CAP CERAMIC PLATE 470pF 63V
C 5	1123 011	CHIP CAP CERAMIC PLATE 470pF 63V
C 6	1123 011	CHIP CAP CERAMIC PLATE 470pF 63V
C 7	1123 011	CHIP CAP CERAMIC PLATE 470pF 63V
C 8	1123 011	CHIP CAP CERAMIC PLATE 470pF 63V
C 9	121 104	CHIP CAPACITOR 100000pF 50V
C 10	121 104	CHIP CAPACITOR 100000pF 50V
C 11	1123 011	CHIP CAP CERAMIC PLATE 470pF 63V
C 12	1123 011	CHIP CAP CERAMIC PLATE 470pF 63V
C 13	121 104	CHIP CAPACITOR 100000pF 50V
C 14	121 104	CHIP CAPACITOR 100000pF 50V
C 15	121 104	CHIP CAPACITOR 100000pF 50V
C 16	121 104	CHIP CAPACITOR 100000pF 50V
C 17	121 104	CHIP CAPACITOR 100000pF 50V
C 18	121 104	CHIP CAPACITOR 100000pF 50V
C 19	121 104	CHIP CAPACITOR 100000pF 50V
C 20	121 104	CHIP CAPACITOR 100000pF 50V
C 21	121 104	CHIP CAPACITOR 100000pF 50V
C 22	121 104	CHIP CAPACITOR 100000pF 50V
C 23	121 104	CHIP CAPACITOR 100000pF 50V
C 24	121 104	CHIP CAPACITOR 100000pF 50V
C 25	121 104	CHIP CAPACITOR 100000pF 50V
C 26	121 104	CHIP CAPACITOR 100000pF 50V
C 27	121 104	CHIP CAPACITOR 100000pF 50V
C 28	121 104	CHIP CAPACITOR 100000pF 50V
C 29	121 104	CHIP CAPACITOR 100000pF 50V
C 30	121 104	CHIP CAPACITOR 100000pF 50V
C 31	121 104	CHIP CAPACITOR 100000pF 50V
C 32	121 104	CHIP CAPACITOR 100000pF 50V
C 33	121 104	CHIP CAPACITOR 100000pF 50V
C 34	121 104	CHIP CAPACITOR 100000pF 50V
C 35	121 104	CHIP CAPACITOR 100000pF 50V
C 36	121 104	CHIP CAPACITOR 100000pF 50V
C 37	121 104	CHIP CAPACITOR 100000pF 50V
C 38	121 104	CHIP CAPACITOR 100000pF 50V
C 39	121 104	CHIP CAPACITOR 100000pF 50V
C 40	121 104	CHIP CAPACITOR 100000pF 50V
M 1	110-0262	PP40 8/16Mb RAM PCB (80-0022)

COMPONENT LIST 115-0141 40M100 PCB ASSY ISSUE 4

CON 1	462 104	CONNECTOR DIN MALE 48 WAY
CON 2	462 104	CONNECTOR DIN MALE 48 WAY
LED 1	309 015	LED 2 COLOUR LN15WP
LED 2	309 015	LED 2 COLOUR LN15WP
LED 3	309 015	LED 2 COLOUR LN15WP
LED 4	309 015	LED 2 COLOUR LN15WP
LED 5	309 015	LED 2 COLOUR LN15WP
LED 6	309 015	LED 2 COLOUR LN15WP
LED 7	309 015	LED 2 COLOUR LN15WP
LED 8	309 015	LED 2 COLOUR LN15WP
LED 9	309 015	LED 2 COLOUR LN15WP
IC 1	324 244	IC 74HCT244 OCTAL 3 STATE DRIVER
IC 2	311 534	IC 74ALS534 OCT D FLIP FLOP INVERT
IC 3	313 374	IC 74LS374 OCTAL D FLIP FLOP/CLEAR
IC 4	324 244	IC 74HCT244 OCTAL 3 STATE DRIVER
IC 5	311 534	IC 74ALS534 OCT D FLIP FLOP INVERT
IC 6	313 374	IC 74LS374 OCTAL D FLIP FLOP/CLEAR
IC 7	115-0157	FPLA 319 153 40M100 PCB IC7
IC 8	401 028	DIL SOCKET 28 WAY VER
IC 15	340 006	RELAY MIN SPDT 5V DIL
IC 16	401 128	TEXTOOL SOCKET 28 WAY
IC 17	401 128	TEXTOOL SOCKET 28 WAY
IC 18	401 128	TEXTOOL SOCKET 28 WAY
IC 19	401 128	TEXTOOL SOCKET 28 WAY
IC 20	401 128	TEXTOOL SOCKET 28 WAY
IC 21	401 128	TEXTOOL SOCKET 28 WAY
IC 22	401 128	TEXTOOL SOCKET 28 WAY
IC 23	401 128	TEXTOOL SOCKET 28 WAY
IC 24	401 128	TEXTOOL SOCKET 28 WAY

COMPONENT LIST 115-0141 40M100 PCB ASSY ISSUE 4

IC 25	340 006	RELAY MIN SPDT 5V DIL
RN 1	173 151	RESISTOR NETWORK SIL 9pin 8rs 150R
RN 2	173 103	RESISTOR NETWORK SIL 9pin 8rs 10K
RN 3	173 103	RESISTOR NETWORK SIL 9pin 8rs 10K
RN 4	173 221	RESISTOR NETWORK SIL 9pin 8rs 220R
DN 1	10-0150	DIODE PACK 8 DIODES 1N4150
DN 2	10-0150	DIODE PACK 8 DIODES 1N4150
DN 3	10-0150	DIODE PACK 8 DIODES 1N4150
R 1	131 470	RESISTOR CARBON FILM 0.25W 5% 47R
R 2	131 472	RESISTOR CARBON FILM 0.25W 5% 4K7
R 3	131 221	RESISTOR CARBON FILM 0.25W 5% 220R
R 4	131 151	RESISTOR CARBON FILM 0.25W 5% 150R
R 5	131 101	RESISTOR CARBON FILM 0.25W 5% 100R
R 6	131 102	RESISTOR CARBON FILM 0.25W 5% 1K0
R 7	135 047	RESISTOR THICK FILM 0.5W 2% 4R7
R 8	131 101	RESISTOR CARBON FILM 0.25W 5% 100R
R 9	131 101	RESISTOR CARBON FILM 0.25W 5% 100R
R 10	131 103	RESISTOR CARBON FILM 0.25W 5% 10K
R 11	131 101	RESISTOR CARBON FILM 0.25W 5% 100R
R 12	131 103	RESISTOR CARBON FILM 0.25W 5% 10K
R 13	131 101	RESISTOR CARBON FILM 0.25W 5% 100R
D 1	288 202	DIODE ZENER 1.3W BZX 85 C3V3
D 2	285 818	DIODE 1N5818RL
D 3	285 818	DIODE 1N5818RL
D 4	285 818	DIODE 1N5818RL
D 5	285 818	DIODE 1N5818RL
D 6	285 818	DIODE 1N5818RL
D 7	285 818	DIODE 1N5818RL
D 8	284 150	DIODE 1N4150
D 9	284 150	DIODE 1N4150
D 10	284 150	DIODE 1N4150
D 11	285 818	DIODE 1N5818RL
D 12	285 818	DIODE 1N5818RL
D 13	285 818	DIODE 1N5818RL
D 14	288 337	DIODE ZENER 5W 4.7V IN5337B
D 15	285 818	DIODE 1N5818RL
D 16	285 818	DIODE 1N5818RL
D 17	285 818	DIODE 1N5818RL
D 18	284 150	DIODE 1N4150
D 19	284 150	DIODE 1N4150
D 20	284 150	DIODE 1N4150
D 21	285 818	DIODE 1N5818RL
D 22	285 818	DIODE 1N5818RL
D 23	285 818	DIODE 1N5818RL
D 24	284 150	DIODE 1N4150
D 25	284 150	DIODE 1N4150
D 26	285 818	DIODE 1N5818RL
D 27	285 818	DIODE 1N5818RL
D 28	285 818	DIODE 1N5818RL
D 29	285 818	DIODE 1N5818RL
D 30	285 818	DIODE 1N5818RL
D 31	285 818	DIODE 1N5818RL
D 32	284 150	DIODE 1N4150
D 33	284 150	DIODE 1N4150
C 1	123 100	CAP MULTILAYER CERAMIC 0.1uF 50V
C 2	123 100	CAP MULTILAYER CERAMIC 0.1uF 50V
C 3	121 103	CHIP CAPACITOR 10000pF 50V
C 4	121 103	CHIP CAPACITOR 10000pF 50V
C 5	121 103	CHIP CAPACITOR 10000pF 50V
C 6	121 103	CHIP CAPACITOR 10000pF 50V
C 7	121 103	CHIP CAPACITOR 10000pF 50V
C 8	121 103	CHIP CAPACITOR 10000pF 50V
C 9	121 103	CHIP CAPACITOR 10000pF 50V
C 10	121 103	CHIP CAPACITOR 10000pF 50V
C 11	121 103	CHIP CAPACITOR 10000pF 50V
C 12	121 103	CHIP CAPACITOR 10000pF 50V
C 13	121 103	CHIP CAPACITOR 10000pF 50V
C 14	121 103	CHIP CAPACITOR 10000pF 50V
C 15	121 103	CHIP CAPACITOR 10000pF 50V
C 16	121 103	CHIP CAPACITOR 10000pF 50V
C 17	121 103	CHIP CAPACITOR 10000pF 50V
C 18	121 103	CHIP CAPACITOR 10000pF 50V
C 19	121 103	CHIP CAPACITOR 10000pF 50V
C 20	121 103	CHIP CAPACITOR 10000pF 50V
C 21	121 103	CHIP CAPACITOR 10000pF 50V
C 22	121 103	CHIP CAPACITOR 10000pF 50V
C 23	121 103	CHIP CAPACITOR 10000pF 50V
C 24	121 103	CHIP CAPACITOR 10000pF 50V
C 25	121 103	CHIP CAPACITOR 10000pF 50V
C 26	121 103	CHIP CAPACITOR 10000pF 50V
M 1	115-0142	40M100 PCB

COMPONENT LIST 115-0221 40M101 PCB ASSY ISSUE 3

CON 1	462 104	CONNECTOR DIN MALE 48 WAY
CON 2	462 104	CONNECTOR DIN MALE 48 WAY
LED 1	309 015	LED 2 COLOUR LN15WP
LED 2	309 015	LED 2 COLOUR LN15WP
LED 3	309 015	LED 2 COLOUR LN15WP
LED 4	309 015	LED 2 COLOUR LN15WP
LED 5	309 015	LED 2 COLOUR LN15WP
LED 6	309 015	LED 2 COLOUR LN15WP
LED 7	309 015	LED 2 COLOUR LN15WP
LED 8	309 015	LED 2 COLOUR LN15WP

COMPONENT LIST 115-0221 40M101 PCB ASSY ISSUE 3

LED 9	309 015	LED 2 COLOUR LN15WP
IC 1	324 244	IC 74HCT244 OCTAL 3 STATE DRIVER
IC 2	311 534	IC 74ALS534 OCT D FLIP FLOP INVERT
IC 3	313 374	IC 74LS374 OCTAL D FLIP FLOP/CLEAR
IC 4	324 244	IC 74HCT244 OCTAL 3 STATE DRIVER
IC 5	340 006	RELAY MIN SPDT 5V DIL
IC 6	311 534	IC 74ALS534 OCT D FLIP FLOP INVERT
IC 7	313 374	IC 74LS374 OCTAL D FLIP FLOP/CLEAR
IC 8	115-0157	FPLA 319 153 40M100 PCB IC7
IC 9	313 374	IC 74LS374 OCTAL D FLIP FLOP/CLEAR
IC 10	314 803	IC ULN2803 OCTAL DARLINGTON ARRAY
IC 11	401 028	DIL SOCKET 28 WAY
IC 12	340 006	RELAY MIN SPDT 5V DIL
IC 13	315 462	IC 75462 PERIPHERAL DRIVER
IC 14	315 462	IC 75462 PERIPHERAL DRIVER
IC 15	315 462	IC 75462 PERIPHERAL DRIVER
IC 16	315 462	IC 75462 PERIPHERAL DRIVER
IC 17	315 462	IC 75462 PERIPHERAL DRIVER
IC 18	313 139	IC 74LS139 DUAL 2-4 DECODE/DEMULTIP
IC 19	401 232	TEXTOOL SOCKET 32 WAY DUAL PITCH
IC 20	340 006	RELAY MIN SPDT 5V DIL
IC 21	401 232	TEXTOOL SOCKET 32 WAY DUAL PITCH
IC 22	401 232	TEXTOOL SOCKET 32 WAY DUAL PITCH
IC 23	401 232	TEXTOOL SOCKET 32 WAY DUAL PITCH
IC 24	401 232	TEXTOOL SOCKET 32 WAY DUAL PITCH
IC 25	401 232	TEXTOOL SOCKET 32 WAY DUAL PITCH
IC 26	401 232	TEXTOOL SOCKET 32 WAY DUAL PITCH
IC 27	401 232	TEXTOOL SOCKET 32 WAY DUAL PITCH
IC 28	401 232	TEXTOOL SOCKET 32 WAY DUAL PITCH
IC 29	340 008	RELAY REED FORM 2C 5V
TR 1	290 056	TRANSISTOR MPSA56
TR 2	295 550	TRANSISTOR 2N5550
RN 1	174 181	RESISTOR NETWORK SIL 8pin 4rs 180R
RN 2	174 181	RESISTOR NETWORK SIL 8pin 4rs 180R
RN 3	173 103	RESISTOR NETWORK SIL 9pin 8rs 10K
RN 4	174 221	RESISTOR NETWORK SIL 8pin 4rs 220R
RN 5	174 221	RESISTOR NETWORK SIL 8pin 4rs 220R
RN 6	173 103	RESISTOR NETWORK SIL 9pin 8rs 10K
DN 1	10-0150	DIODE PACK 8 DIODES 1N4150
DN 2	10-0150	DIODE PACK 8 DIODES 1N4150
DN 3	10-0150	DIODE PACK 8 DIODES 1N4150
DN 4	115-0236	DIODE PACK 8 DIODE 1N5818
DN 5	115-0236	DIODE PACK 8 DIODE 1N5818
DN 6	10-0150	DIODE PACK 8 DIODES 1N4150
R 1	131 103	RESISTOR CARBON FILM 0.25W 5% 10K
R 2	131 222	RESISTOR CARBON FILM 0.25W 5% 2K2
R 3	131 472	RESISTOR CARBON FILM 0.25W 5% 4K7
R 4	131 101	RESISTOR CARBON FILM 0.25W 5% 100R
R 5	131 102	RESISTOR CARBON FILM 0.25W 5% 1K0
R 6	131 181	RESISTOR CARBON FILM 0.25W 5% 180R
R 7	131 221	RESISTOR CARBON FILM 0.25W 5% 220R
R 8	131 103	RESISTOR CARBON FILM 0.25W 5% 10K
R 9	131 101	RESISTOR CARBON FILM 0.25W 5% 100R
R 10	131 101	RESISTOR CARBON FILM 0.25W 5% 100R
R 11	131 103	RESISTOR CARBON FILM 0.25W 5% 10K
R 12	135 047	RESISTOR THICK FILM 0.5W 2% 4R7
R 13	131 470	RESISTOR CARBON FILM 0.25W 5% 47R
R 14	131 471	RESISTOR CARBON FILM 0.25W 5% 470R
R 15	131 181	RESISTOR CARBON FILM 0.25W 5% 180R
R 16	131 181	RESISTOR CARBON FILM 0.25W 5% 180R
R 17	131 101	RESISTOR CARBON FILM 0.25W 5% 100R
R 18	131 101	RESISTOR CARBON FILM 0.25W 5% 100R
R 19	131 101	RESISTOR CARBON FILM 0.25W 5% 100R
R 20	131 101	RESISTOR CARBON FILM 0.25W 5% 100R
D 1	284 150	DIODE 1N4150
D 2	284 150	DIODE 1N4150
D 3	284 150	DIODE 1N4150
D 4	284 150	DIODE 1N4150
D 5	284 150	DIODE 1N4150
D 6	284 150	DIODE 1N4150
D 7	284 148	DIODE 1N4148
D 8	284 148	DIODE 1N4148
D 9	284 148	DIODE 1N4148
D 10	288 337	DIODE ZENER 5W 4.7V IN5337B
D 11	288 202	DIODE ZENER 1.3W BZX 85 C3V3
D 12	284 150	DIODE 1N4150
D 14	285 818	DIODE 1N5818RL
D 15	285 818	DIODE 1N5818RL
D 16	285 818	DIODE 1N5818RL
D 17	285 818	DIODE 1N5818RL
D 18	285 818	DIODE 1N5818RL
D 19	285 818	DIODE 1N5818RL
D 20	285 818	DIODE 1N5818RL
D 21	285 818	DIODE 1N5818RL
D 22	284 150	DIODE 1N4150
D 23	284 150	DIODE 1N4150
D 24	284 150	DIODE 1N4150
D 25	284 150	DIODE 1N4150
D 26	284 150	DIODE 1N4150
D 27	285 818	DIODE 1N5818RL
D 28	285 818	DIODE 1N5818RL
C 1	123 100	CAP MULTILAYER CERAMIC 0.1uF 50V
C 2	123 100	CAP MULTILAYER CERAMIC 0.1uF 50V
C 3	121 103	CHIP CAPACITOR 10000pF 50V
C 4	121 103	CHIP CAPACITOR 10000pF 50V

COMPONENT LIST 115-0221 40M101 PCB ASSY ISSUE 3

C 5	121 103	CHIP CAPACITOR 10000pF 50V
C 6	121 103	CHIP CAPACITOR 10000pF 50V
C 7	121 103	CHIP CAPACITOR 10000pF 50V
C 8	121 103	CHIP CAPACITOR 10000pF 50V
C 9	121 103	CHIP CAPACITOR 10000pF 50V
C 10	121 103	CHIP CAPACITOR 10000pF 50V
C 11	121 103	CHIP CAPACITOR 10000pF 50V
C 12	121 103	CHIP CAPACITOR 10000pF 50V
C 13	121 103	CHIP CAPACITOR 10000pF 50V
C 14	121 103	CHIP CAPACITOR 10000pF 50V
C 15	121 103	CHIP CAPACITOR 10000pF 50V
C 16	121 103	CHIP CAPACITOR 10000pF 50V
C 17	121 103	CHIP CAPACITOR 10000pF 50V
C 18	121 103	CHIP CAPACITOR 10000pF 50V
C 19	121 103	CHIP CAPACITOR 10000pF 50V
C 20	121 103	CHIP CAPACITOR 10000pF 50V
C 21	121 103	CHIP CAPACITOR 10000pF 50V
C 22	121 103	CHIP CAPACITOR 10000pF 50V
C 23	121 103	CHIP CAPACITOR 10000pF 50V
C 24	121 103	CHIP CAPACITOR 10000pF 50V
C 25	121 103	CHIP CAPACITOR 10000pF 50V
C 26	121 103	CHIP CAPACITOR 10000pF 50V
C 27	121 103	CHIP CAPACITOR 10000pF 50V
C 28	121 103	CHIP CAPACITOR 10000pF 50V
C 29	121 103	CHIP CAPACITOR 10000pF 50V
C 30	121 103	CHIP CAPACITOR 10000pF 50V
C 31	121 103	CHIP CAPACITOR 10000pF 50V
C 32	121 103	CHIP CAPACITOR 10000pF 50V
C 33	121 103	CHIP CAPACITOR 10000pF 50V
C 34	121 103	CHIP CAPACITOR 10000pF 50V
C 35	121 103	CHIP CAPACITOR 10000pF 50V
C 36	121 103	CHIP CAPACITOR 10000pF 50V
C 37	121 103	CHIP CAPACITOR 10000pF 50V
C 38	121 103	CHIP CAPACITOR 10000pF 50V
C 39	121 103	CHIP CAPACITOR 10000pF 50V
C 40	121 103	CHIP CAPACITOR 10000pF 50V
C 41	121 103	CHIP CAPACITOR 10000pF 50V
C 42	121 103	CHIP CAPACITOR 10000pF 50V
C 43	121 103	CHIP CAPACITOR 10000pF 50V
C 44	121 103	CHIP CAPACITOR 10000pF 50V
C 45	123 100	CAP MULTILAYER CERAMIC 0.1uF 50V
M 1	115-0222	41M101 PCB (80-0050)

COMPONENT LIST 115-0331 40M102 PCB ASSY ISSUE 1

CON 1	462 104	CONNECTOR DIN MALE 48 WAY
CON 2	462 104	CONNECTOR DIN MALE 48 WAY
LED 1	309 015	LED 2 COLOUR LN15WP
LED 2	309 015	LED 2 COLOUR LN15WP
LED 3	309 015	LED 2 COLOUR LN15WP
LED 4	309 015	LED 2 COLOUR LN15WP
LED 5	309 015	LED 2 COLOUR LN15WP
LED 6	309 015	LED 2 COLOUR LN15WP
LED 7	309 015	LED 2 COLOUR LN15WP
LED 8	309 015	LED 2 COLOUR LN15WP
LED 9	309 015	LED 2 COLOUR LN15WP
IC 1	324 374	IC 74HCT374 OCTAL D FLIP FLOP
IC 2	324 244	IC 74HCT244 OCTAL 3 STATE DRIVER
IC 3	324 244	IC 74HCT244 OCTAL 3 STATE DRIVER
IC 4	324 374	IC 74HCT374 OCTAL D FLIP FLOP
IC 5	324 374	IC 74HCT374 OCTAL D FLIP FLOP
IC 6	324 244	IC 74HCT244 OCTAL 3 STATE DRIVER
IC 7	324 374	IC 74HCT374 OCTAL D FLIP FLOP
IC 8	324 374	IC 74HCT374 OCTAL D FLIP FLOP
IC 9	324 244	IC 74HCT244 OCTAL 3 STATE DRIVER
IC 10	313 139	IC 74LS139 DUAL 2-4 DECODE/DEMULTIP
IC 11	115-0335	FPLA 319 153 40M102 PCB IC11
IC 12	401 028	DIL SOCKET 28 WAY
IC 13	401 140	TEXTOOL SOCKET 40 WAY
IC 14	401 140	TEXTOOL SOCKET 40 WAY
IC 15	401 140	TEXTOOL SOCKET 40 WAY
IC 16	401 140	TEXTOOL SOCKET 40 WAY
IC 17	401 140	TEXTOOL SOCKET 40 WAY
IC 18	401 140	TEXTOOL SOCKET 40 WAY
IC 19	401 140	TEXTOOL SOCKET 40 WAY
IC 20	401 140	TEXTOOL SOCKET 40 WAY
IC 21	401 140	TEXTOOL SOCKET 40 WAY
RN 1	174 101	RESISTOR NETWORK SIL 8pin 4rs 100R
RN 2	173 103	RESISTOR NETWORK SIL 9pin 8rs 10K
RN 3	173 103	RESISTOR NETWORK SIL 9pin 8rs 10K
RN 4	174 221	RESISTOR NETWORK SIL 8pin 4rs 220R
RN 5	174 221	RESISTOR NETWORK SIL 8pin 4rs 220R
RN 6	174 181	RESISTOR NETWORK SIL 8pin 4rs 180R
RN 7	174 181	RESISTOR NETWORK SIL 8pin 4rs 180R
RN 8	174 221	RESISTOR NETWORK SIL 8pin 4rs 220R
RN 9	174 221	RESISTOR NETWORK SIL 8pin 4rs 220R
RN 10	173 103	RESISTOR NETWORK SIL 9pin 8rs 10K
RN 11	173 103	RESISTOR NETWORK SIL 9pin 8rs 10K
RN 12	174 221	RESISTOR NETWORK SIL 8pin 4rs 220R
RN 13	174 221	RESISTOR NETWORK SIL 8pin 4rs 220R
DN 1	10-0150	DIODE PACK 8 DIODES 1N4150
DN 2	10-0150	DIODE PACK 8 DIODES 1N4150
DN 3	10-0150	DIODE PACK 8 DIODES 1N4150
DN 4	10-0150	DIODE PACK 8 DIODES 1N4150
DN 5	10-0150	DIODE PACK 8 DIODES 1N4150

COMPONENT LIST 115-0331 40M102 PCB ASSY ISSUE 1

DN 6	115-0236	DIODE PACK 8 DIODE 1N5818
DN 7	115-0236	DIODE PACK 8 DIODE 1N5818
R 1	131 221	RESISTOR CARBON FILM 0.25W 5% 220R
R 2	131 181	RESISTOR CARBON FILM 0.25W 5% 180R
R 3	131 101	RESISTOR CARBON FILM 0.25W 5% 100R
R 4	131 470	RESISTOR CARBON FILM 0.25W 5% 47R
R 5	131 101	RESISTOR CARBON FILM 0.25W 5% 100R
R 6	131 472	RESISTOR CARBON FILM 0.25W 5% 4K7
R 7	131 101	RESISTOR CARBON FILM 0.25W 5% 100R
R 8	131 103	RESISTOR CARBON FILM 0.25W 5% 10K
R 9	131 101	RESISTOR CARBON FILM 0.25W 5% 100R
R 10	131 103	RESISTOR CARBON FILM 0.25W 5% 10K
D 1	288 202	DIODE ZENER 1.3W BZX 85 C3V3
D 2	284 148	DIODE 1N4148
D 3	284 148	DIODE 1N4148
D 4	284 150	DIODE 1N4150
D 5	284 148	DIODE 1N4148
D 6	284 148	DIODE 1N4148
D 7	284 148	DIODE 1N4148
C 1	123 100	CAP MULTILAYER CERAMIC 0.1uF 50V
C 2	120 110	CAP RESIN DIPPED TANT 1.5uF 25V
C 3	121 103	CHIP CAPACITOR 10000pF 50V
C 4	121 103	CHIP CAPACITOR 10000pF 50V
C 5	121 103	CHIP CAPACITOR 10000pF 50V
C 6	121 103	CHIP CAPACITOR 10000pF 50V
C 7	121 103	CHIP CAPACITOR 10000pF 50V
C 8	121 103	CHIP CAPACITOR 10000pF 50V
C 9	121 103	CHIP CAPACITOR 10000pF 50V
C 10	121 103	CHIP CAPACITOR 10000pF 50V
C 11	121 103	CHIP CAPACITOR 10000pF 50V
C 12	121 103	CHIP CAPACITOR 10000pF 50V
C 13	121 103	CHIP CAPACITOR 10000pF 50V
C 14	121 103	CHIP CAPACITOR 10000pF 50V
C 15	121 103	CHIP CAPACITOR 10000pF 50V
C 16	121 103	CHIP CAPACITOR 10000pF 50V
C 17	121 103	CHIP CAPACITOR 10000pF 50V
C 18	121 103	CHIP CAPACITOR 10000pF 50V
C 19	121 103	CHIP CAPACITOR 10000pF 50V
M 1	115-0332	40M102 PCB

COMPONENT LIST 115-0271 41M200 PCB ASSY ISSUE 6

CON 1	462 104	CONNECTOR DIN MALE 48 WAY
CON 2	462 104	CONNECTOR DIN MALE 48 WAY
LED 1	309 015	LED 2 COLOUR LN15WP
LED 2	309 015	LED 2 COLOUR LN15WP
LED 3	309 015	LED 2 COLOUR LN15WP
LED 4	309 015	LED 2 COLOUR LN15WP
LED 5	309 015	LED 2 COLOUR LN15WP
LED 6	309 015	LED 2 COLOUR LN15WP
LED 7	309 015	LED 2 COLOUR LN15WP
LED 8	309 015	LED 2 COLOUR LN15WP
LED 9	309 015	LED 2 COLOUR LN15WP
LED 10	309 015	LED 2 COLOUR LN15WP
IC 2	115-0283	FPLA 319 153 41M200 PCB IC2
IC 3	401 032	DIL SOCKET 32 WAY
IC 4	115-0284	FPLA 319 153 41M200 PCB IC4
IC 5	340 006	RELAY MIN SPDT 5V DIL
IC 6	401 140	TEXTOOL SOCKET 40 WAY
IC 7	401 140	TEXTOOL SOCKET 40 WAY
IC 8	401 140	TEXTOOL SOCKET 40 WAY
IC 9	401 140	TEXTOOL SOCKET 40 WAY
IC 10	401 140	TEXTOOL SOCKET 40 WAY
IC 11	401 140	TEXTOOL SOCKET 40 WAY
IC 12	401 140	TEXTOOL SOCKET 40 WAY
IC 13	401 140	TEXTOOL SOCKET 40 WAY
IC 14	401 140	TEXTOOL SOCKET 40 WAY
IC 15	401 128	TEXTOOL SOCKET 28 WAY
IC 16	1324 374	IC 74HCT374 OCT D FLIP FLOP S.O.
IC 17	1324 244	IC 74HCT244 OCT 3 STATE DRIVER S.O.
IC 18	1324 374	IC 74HCT374 OCT D FLIP FLOP S.O.
IC 19	1324 374	IC 74HCT374 OCT D FLIP FLOP S.O.
IC 20	1324 374	IC 74HCT374 OCT D FLIP FLOP S.O.
IC 21	1324 374	IC 74HCT374 OCT D FLIP FLOP S.O.
IC 22	1324 244	IC 74HCT244 OCT 3 STATE DRIVER S.O.
IC 23	1324 244	IC 74HCT244 OCT 3 STATE DRIVER S.O.
IC 24	1324 374	IC 74HCT374 OCT D FLIP FLOP S.O.
IC 25	1324 374	IC 74HCT374 OCT D FLIP FLOP S.O.
IC 26	1324 244	IC 74HCT244 OCT 3 STATE DRIVER S.O.
IC 27	1324 244	IC 74HCT244 OCT 3 STATE DRIVER S.O.
IC 28	1324 374	IC 74HCT374 OCT D FLIP FLOP S.O.
IC 29	1324 374	IC 74HCT374 OCT D FLIP FLOP S.O.
IC 30	1324 244	IC 74HCT244 OCT 3 STATE DRIVER S.O.
IC 31	1324 374	IC 74HCT374 OCT D FLIP FLOP S.O.
IC 32	1313 163	IC 74LS163 SYNC BIN COUNTER S.O.
IC 33	1313 000	IC 74LS00 QUAD 2 IN NAND GATE S.O.
IC 34	1310 007	IC 7407 HEX BUFFER S.O. PACK
IC 35	1310 007	IC 7407 HEX BUFFER S.O. PACK
IC 36	1310 007	IC 7407 HEX BUFFER S.O. PACK
IC 37	1313 253	IC 74LS253 DUAL 4-1 SELECTOR S.O.
IC 38	1313 125	IC 74LS125 QUAD 3 STATE BUFFER S.O.
IC 39	1324 138	IC 74HCT138 DECODE/DEMULTIPLEX S.O.
IC 40	1313 125	IC 74LS125 QUAD 3 STATE BUFFER S.O.
TR 2	1290 006	TRANSISTOR FMMTA06 SURFACE MOUNT

COMPONENT LIST 115-0271 41M200 PCB ASSY ISSUE 6

TR 3	1290 006	TRANSISTOR FMMTA06 SURFACE MOUNT
RN 1	174 221	RESISTOR NETWORK SIL 8pin 4rs 220R
RN 2	174 221	RESISTOR NETWORK SIL 8pin 4rs 220R
RN 3	173 472	RESISTOR NETWORK SIL 9pin 8rs 4K7
RN 4	173 221	RESISTOR NETWORK SIL 9pin 8rs 220R
RN 5	174 471	RESISTOR NETWORK SIL 8pin 4rs 470R
RN 6	174 471	RESISTOR NETWORK SIL 8pin 4rs 470R
RN 7	173 223	RESISTOR NETWORK SIL 9pin 8rs 22K
RN 8	173 472	RESISTOR NETWORK SIL 9pin 8rs 4K7
RN 9	173 472	RESISTOR NETWORK SIL 9pin 8rs 4K7
RN 10	173 472	RESISTOR NETWORK SIL 9pin 8rs 4K7
RN 11	174 181	RESISTOR NETWORK SIL 8pin 4rs 180R
RN 12	174 181	RESISTOR NETWORK SIL 8pin 4rs 180R
RN 13	174 221	RESISTOR NETWORK SIL 8pin 4rs 220R
RN 14	174 221	RESISTOR NETWORK SIL 8pin 4rs 220R
RN 15	173 222	RESISTOR NETWORK SIL 9pin 8rs 2K2
RN 16	173 472	RESISTOR NETWORK SIL 9pin 8rs 4K7
RN 17	173 103	RESISTOR NETWORK SIL 9pin 8rs 10K
RN 18	173 103	RESISTOR NETWORK SIL 9pin 8rs 10K
RN 19	173 103	RESISTOR NETWORK SIL 9pin 8rs 10K
DN 1	10-0150	DIODE PACK 8 DIODES 1N4150
DN 2	10-0150	DIODE PACK 8 DIODES 1N4150
DN 3	10-0150	DIODE PACK 8 DIODES 1N4150
DN 4	10-0150	DIODE PACK 8 DIODES 1N4150
DN 5	10-0150	DIODE PACK 8 DIODES 1N4150
DN 6	115-0236	DIODE PACK 8 DIODE 1N5818
DN 7	115-0236	DIODE PACK 8 DIODE 1N5818
DN 8	115-0236	DIODE PACK 8 DIODE 1N5818
R 1	131 151	RESISTOR CARBON FILM 0.25W 5% 150R
R 2	131 471	RESISTOR CARBON FILM 0.25W 5% 470R
R 3	131 151	RESISTOR CARBON FILM 0.25W 5% 150R
R 4	131 221	RESISTOR CARBON FILM 0.25W 5% 220R
R 5	131 151	RESISTOR CARBON FILM 0.25W 5% 150R
R 6	131 221	RESISTOR CARBON FILM 0.25W 5% 220R
R 7	131 101	RESISTOR CARBON FILM 0.25W 5% 100R
R 8	131 221	RESISTOR CARBON FILM 0.25W 5% 220R
R 9	131 221	RESISTOR CARBON FILM 0.25W 5% 220R
R 10	134 102	RESISTOR METAL FILM 0.25W 1% 1K0
D 1	288 202	DIODE ZENER 1.3W BZX 85 C3V3
D 2	1284 001	DIODE LL4001G SURFACE MOUNT
D 3	1280 032	DIODE BAS32 SURFACE MOUNT
D 4	1284 001	DIODE LL4001G SURFACE MOUNT
D 5	1284 001	DIODE LL4001G SURFACE MOUNT
D 6	1280 032	DIODE BAS32 SURFACE MOUNT
D 7	1284 001	DIODE LL4001G SURFACE MOUNT
D 8	1280 032	DIODE BAS32 SURFACE MOUNT
D 9	1280 032	DIODE BAS32 SURFACE MOUNT
D 10	1280 032	DIODE BAS32 SURFACE MOUNT
D 11	1280 032	DIODE BAS32 SURFACE MOUNT
D 12	1280 032	DIODE BAS32 SURFACE MOUNT
D 13	1280 032	DIODE BAS32 SURFACE MOUNT
C 1	121 103	CHIP CAPACITOR 10000pF 50V
C 2	121 103	CHIP CAPACITOR 10000pF 50V
C 3	121 103	CHIP CAPACITOR 10000pF 50V
C 4	121 103	CHIP CAPACITOR 10000pF 50V
C 5	121 103	CHIP CAPACITOR 10000pF 50V
C 6	121 103	CHIP CAPACITOR 10000pF 50V
C 7	121 103	CHIP CAPACITOR 10000pF 50V
C 8	121 104	CHIP CAPACITOR 100000pF 50V
C 9	121 103	CHIP CAPACITOR 10000pF 50V
C 10	121 103	CHIP CAPACITOR 10000pF 50V
C 11	121 103	CHIP CAPACITOR 10000pF 50V
C 12	121 103	CHIP CAPACITOR 10000pF 50V
C 13	121 103	CHIP CAPACITOR 10000pF 50V
C 14	121 103	CHIP CAPACITOR 10000pF 50V
C 15	121 103	CHIP CAPACITOR 10000pF 50V
C 16	121 103	CHIP CAPACITOR 10000pF 50V
C 17	121 103	CHIP CAPACITOR 10000pF 50V
C 18	121 103	CHIP CAPACITOR 10000pF 50V
C 19	121 103	CHIP CAPACITOR 10000pF 50V
C 20	121 103	CHIP CAPACITOR 10000pF 50V
C 21	121 103	CHIP CAPACITOR 10000pF 50V
C 22	121 103	CHIP CAPACITOR 10000pF 50V
C 23	121 104	CHIP CAPACITOR 100000pF 50V
C 24	121 103	CHIP CAPACITOR 10000pF 50V
C 25	121 103	CHIP CAPACITOR 10000pF 50V
C 26	121 103	CHIP CAPACITOR 10000pF 50V
C 27	121 103	CHIP CAPACITOR 10000pF 50V
C 28	121 103	CHIP CAPACITOR 10000pF 50V
C 29	121 103	CHIP CAPACITOR 10000pF 50V
C 30	120 110	CAP RESIN DIPPED TANT 1.5uF 25V
M 1	115-0272	41M200 PCB (80-0012)
M 2	318 7512	IC 27512 EPROM 512K 250nS

COMPONENT LIST 115-0201 42M100 PCB ASSY ISSUE 2

CON 1	462 104	CONNECTOR DIN MALE 48 WAY
CON 2	462 104	CONNECTOR DIN MALE 48 WAY
LED 1	309 015	LED 2 COLOUR LN15WP
LED 2	309 015	LED 2 COLOUR LN15WP
LED 3	309 015	LED 2 COLOUR LN15WP
LED 4	309 015	LED 2 COLOUR LN15WP
LED 5	309 015	LED 2 COLOUR LN15WP
LED 6	309 015	LED 2 COLOUR LN15WP

COMPONENT LIST 115-0201 42M100 PCB ASSY ISSUE 2

LED 7	309 015	LED 2 COLOUR LN15WP
LED 8	309 015	LED 2 COLOUR LN15WP
IC 1	324 646	IC 74HCT646 OCTBUS XCVR/REGLOG TRUE
IC 2	324 646	IC 74HCT646 OCTBUS XCVR/REGLOG TRUE
IC 3	324 646	IC 74HCT646 OCTBUS XCVR/REGLOG TRUE
IC 4	324 646	IC 74HCT646 OCTBUS XCVR/REGLOG TRUE
IC 5	324 646	IC 74HCT646 OCTBUS XCVR/REGLOG TRUE
IC 6	324 646	IC 74HCT646 OCTBUS XCVR/REGLOG TRUE
IC 7	324 646	IC 74HCT646 OCTBUS XCVR/REGLOG TRUE
IC 8	324 646	IC 74HCT646 OCTBUS XCVR/REGLOG TRUE
IC 9	313 374	IC 74LS374 OCTAL D FLIP FLOP/CLEAR
IC 10	313 374	IC 74LS374 OCTAL D FLIP FLOP/CLEAR
IC 11	313 138	IC 74LS138 3-8 LINE DECODE/DEMULTIP
IC 12	340 006	RELAY MIN SPDT 5V DIL
IC 13	313 259	IC 74LS259 8 BIT ADDRESSABLE LATCH
IC 14	115-0157	FPLA 319 153 40M100 PCB IC7
IC 15	401 128	TEXTOOL SOCKET 28 WAY
IC 16	401 128	TEXTOOL SOCKET 28 WAY
IC 17	401 128	TEXTOOL SOCKET 28 WAY
IC 18	401 128	TEXTOOL SOCKET 28 WAY
IC 19	401 128	TEXTOOL SOCKET 28 WAY
IC 20	401 128	TEXTOOL SOCKET 28 WAY
IC 21	401 128	TEXTOOL SOCKET 28 WAY
IC 22	401 128	TEXTOOL SOCKET 28 WAY
IC 23	313 002	IC 74LS02 QUAD 2 IN NOR GATE
IC 24	401 028	DIL SOCKET 28 WAY
IC 25	313 002	IC 74LS02 QUAD 2 IN NOR GATE
RN 1	173 103	RESISTOR NETWORK SIL 9pin 8rs 10K
RN 2	174 221	RESISTOR NETWORK SIL 8pin 4rs 220R
RN 3	173 103	RESISTOR NETWORK SIL 9pin 8rs 10K
RN 4	174 221	RESISTOR NETWORK SIL 8pin 4rs 220R
RN 5	174 221	RESISTOR NETWORK SIL 8pin 4rs 220R
RN 6	174 221	RESISTOR NETWORK SIL 8pin 4rs 220R
RN 7	174 221	RESISTOR NETWORK SIL 8pin 4rs 220R
RN 8	174 221	RESISTOR NETWORK SIL 8pin 4rs 220R
RN 9	174 221	RESISTOR NETWORK SIL 8pin 4rs 220R
RN 10	173 103	RESISTOR NETWORK SIL 9pin 8rs 10K
RN 11	174 221	RESISTOR NETWORK SIL 8pin 4rs 220R
RN 12	174 221	RESISTOR NETWORK SIL 8pin 4rs 220R
RN 13	174 221	RESISTOR NETWORK SIL 8pin 4rs 220R
RN 14	174 221	RESISTOR NETWORK SIL 8pin 4rs 220R
RN 15	174 221	RESISTOR NETWORK SIL 8pin 4rs 220R
RN 16	173 103	RESISTOR NETWORK SIL 9pin 8rs 10K
RN 17	174 221	RESISTOR NETWORK SIL 8pin 4rs 220R
RN 18	173 103	RESISTOR NETWORK SIL 9pin 8rs 10K
RN 19	174 221	RESISTOR NETWORK SIL 8pin 4rs 220R
RN 20	174 221	RESISTOR NETWORK SIL 8pin 4rs 220R
RN 21	174 221	RESISTOR NETWORK SIL 8pin 4rs 220R
RN 22	173 103	RESISTOR NETWORK SIL 9pin 8rs 10K
RN 23	173 103	RESISTOR NETWORK SIL 9pin 8rs 10K
RN 24	173 103	RESISTOR NETWORK SIL 9pin 8rs 10K
RN 25	173 151	RESISTOR NETWORK SIL 9pin 8rs 150R
RN 26	173 221	RESISTOR NETWORK SIL 9pin 8rs 220R
DN 1	10-0150	DIODE PACK 8 DIODES 1N4150
DN 2	10-0150	DIODE PACK 8 DIODES 1N4150
DN 3	10-0150	DIODE PACK ODES 1N4150
DN 4	10-0150	DIODE PACK 8 DIODES 1N4150
DN 5	10-0150	DIODE PACK 8 DIODES 1N4150
DN 6	10-0150	DIODE PACK 8 DIODES 1N4150
DN 7	10-0150	DIODE PACK 8 DIODES 1N4150
DN 8	10-0150	DIODE PACK 8 DIODES 1N4150
DN 9	10-0150	DIODE PACK 8 DIODES 1N4150
R 1	131 470	RESISTOR CARBON FILM 0.25W 5% 47R
R 2	131 101	RESISTOR CARBON FILM 0.25W 5% 100R
R 3	131 102	RESISTOR CARBON FILM 0.25W 5% 1K0
R 4	131 471	RESISTOR CARBON FILM 0.25W 5% 470R
D 1	284 150	DIODE 1N4150
D 2	284 150	DIODE 1N4150
D 3	285 818	DIODE 1N5818RL
D 4	288 202	DIODE ZENER 1.3W BZX 85 C3V3
D 5	284 150	DIODE 1N4150
D 6	285 818	DIODE 1N5818RL
D 7	285 818	DIODE 1N5818RL
D 8	285 818	DIODE 1N5818RL
D 9	285 818	DIODE 1N5818RL
D 10	285 818	DIODE 1N5818RL
D 11	285 818	DIODE 1N5818RL
D 12	285 818	DIODE 1N5818RL
D 13	285 818	DIODE 1N5818RL
D 14	285 818	DIODE 1N5818RL
D 15	285 818	DIODE 1N5818RL
D 16	285 818	DIODE 1N5818RL
D 17	284 150	DIODE 1N4150
D 18	284 150	DIODE 1N4150
D 19	284 150	DIODE 1N4150
D 20	285 818	DIODE 1N5818RL
D 21	285 818	DIODE 1N5818RL
D 22	285 818	DIODE 1N5818RL
D 23	284 150	DIODE 1N4150
D 24	285 818	DIODE 1N5818RL
D 25	285 818	DIODE 1N5818RL
D 26	285 818	DIODE 1N5818RL
D 27	285 818	DIODE 1N5818RL
D 28	285 818	DIODE 1N5818RL
D 29	285 818	DIODE 1N5818RL

COMPONENT LIST 115-0201 42M100 PCB ASSY ISSUE 2

C 1	123 100	CAP MULTILAYER CERAMIC 0.1uF 50V
C 2	123 100	CAP MULTILAYER CERAMIC 0.1uF 50V
C 3	121 103	CHIP CAPACITOR 10000pF 50V
C 4	121 103	CHIP CAPACITOR 10000pF 50V
C 5	121 103	CHIP CAPACITOR 10000pF 50V
C 6	121 103	CHIP CAPACITOR 10000pF 50V
C 7	121 103	CHIP CAPACITOR 10000pF 50V
C 8	121 103	CHIP CAPACITOR 10000pF 50V
C 9	121 103	CHIP CAPACITOR 10000pF 50V
C 10	121 103	CHIP CAPACITOR 10000pF 50V
C 11	121 103	CHIP CAPACITOR 10000pF 50V
C 12	121 103	CHIP CAPACITOR 10000pF 50V
C 13	121 103	CHIP CAPACITOR 10000pF 50V
C 14	121 103	CHIP CAPACITOR 10000pF 50V
C 15	121 103	CHIP CAPACITOR 10000pF 50V
C 16	121 103	CHIP CAPACITOR 10000pF 50V
C 17	121 103	CHIP CAPACITOR 10000pF 50V
C 18	121 103	CHIP CAPACITOR 10000pF 50V
C 19	121 103	CHIP CAPACITOR 10000pF 50V
C 20	121 103	CHIP CAPACITOR 10000pF 50V
C 21	121 103	CHIP CAPACITOR 10000pF 50V
C 22	121 103	CHIP CAPACITOR 10000pF 50V
C 23	121 103	CHIP CAPACITOR 10000pF 50V
C 24	121 103	CHIP CAPACITOR 10000pF 50V
C 25	121 103	CHIP CAPACITOR 10000pF 50V
C 26	121 103	CHIP CAPACITOR 10000pF 50V
M 1	115-0202	42M100 PCB
M 2	318 7512	IC 27512 EPROM 512K 250nS

COMPONENT LIST 115-0351 42M101 PCB ASSY ISSUE 2

CON 1	462 104	CONNECTOR DIN MALE 48 WAY
CON 2	462 104	CONNECTOR DIN MALE 48 WAY
LED 1	309 015	LED 2 COLOUR LN15WP
LED 2	309 015	LED 2 COLOUR LN15WP
LED 3	309 015	LED 2 COLOUR LN15WP
LED 4	309 015	LED 2 COLOUR LN15WP
LED 5	309 015	LED 2 COLOUR LN15WP
LED 6	309 015	LED 2 COLOUR LN15WP
LED 7	309 015	LED 2 COLOUR LN15WP
LED 8	309 015	LED 2 COLOUR LN15WP
IC 1	324 374	IC 74HCT374 OCTAL D FLIP FLOP
IC 2	324 374	IC 74HCT374 OCTAL D FLIP FLOP
IC 3	324 646	IC 74HCT646 OCTBUS XCVR/REGLOG TRUE
IC 4	324 646	IC 74HCT646 OCTBUS XCVR/REGLOG TRUE
IC 5	324 646	IC 74HCT646 OCTBUS XCVR/REGLOG TRUE
IC 6	324 646	IC 74HCT646 OCTBUS XCVR/REGLOG TRUE
IC 7	324 646	IC 74HCT646 OCTBUS XCVR/REGLOG TRUE
IC 8	324 646	IC 74HCT646 OCTBUS XCVR/REGLOG TRUE
IC 9	324 646	IC 74HCT646 OCTBUS XCVR/REGLOG TRUE
IC 10	324 646	IC 74HCT646 OCTBUS XCVR/REGLOG TRUE
IC 11	401 032	DIL SOCKET 32 WAY
IC 12	115-0355	FPLA 319 153 42M101 PCB IC12
IC 13	324 374	IC 74HCT374 OCTAL D FLIP FLOP
IC 14	340 006	RELAY MIN SPDT 5V DIL
IC 15	340 006	RELAY MIN SPDT 5V DIL
IC 16	340 006	RELAY MIN SPDT 5V DIL
IC 17	401 232	TEXTOOL SOCKET 32 WAY DUAL PITCH
IC 18	401 232	TEXTOOL SOCKET 32 WAY DUAL PITCH
IC 19	401 232	TEXTOOL SOCKET 32 WAY DUAL PITCH
IC 20	401 232	TEXTOOL SOCKET 32 WAY DUAL PITCH
IC 21	401 232	TEXTOOL SOCKET 32 WAY DUAL PITCH
IC 22	401 232	TEXTOOL SOCKET 32 WAY DUAL PITCH
IC 23	401 232	TEXTOOL SOCKET 32 WAY DUAL PITCH
IC 24	401 232	TEXTOOL SOCKET 32 WAY DUAL PITCH
IC 25	313 138	IC 74LS138 3-8 LINE DECODE/DEMULTIP
IC 26	313 259	IC 74LS259 8 BIT ADDRESSABLE LATCH
IC 27	313 002	IC 74LS02 QUAD 2 IN NOR GATE
IC 28	313 002	IC 74LS02 QUAD 2 IN NOR GATE
IC 29	315 462	IC 75462 PERIPHERAL DRIVER
TR 1	290 056	TRANSISTOR MPSA56
TR 2	295 550	TRANSISTOR 2N5550
RN 1	173 103	RESISTOR NETWORK SIL 9pin 8rs 10K
RN 2	173 103	RESISTOR NETWORK SIL 9pin 8rs 10K
RN 3	173 103	RESISTOR NETWORK SIL 9pin 8rs 10K
RN 4	173 103	RESISTOR NETWORK SIL 9pin 8rs 10K
RN 5	173 103	RESISTOR NETWORK SIL 9pin 8rs 10K
RN 6	173 103	RESISTOR NETWORK SIL 9pin 8rs 10K
RN 7	173 103	RESISTOR NETWORK SIL 9pin 8rs 10K
RN 8	173 103	RESISTOR NETWORK SIL 9pin 8rs 10K
RN 9	174 221	RESISTOR NETWORK SIL 8pin 4rs 220R
RN 10	174 221	RESISTOR NETWORK SIL 8pin 4rs 220R
RN 11	174 181	RESISTOR NETWORK SIL 8pin 4rs 180R
RN 12	174 181	RESISTOR NETWORK SIL 8pin 4rs 180R
RN 13	174 221	RESISTOR NETWORK SIL 8pin 4rs 220R
RN 14	174 221	RESISTOR NETWORK SIL 8pin 4rs 220R
RN 15	174 221	RESISTOR NETWORK SIL 8pin 4rs 220R
RN 16	174 221	RESISTOR NETWORK SIL 8pin 4rs 220R
RN 17	174 221	RESISTOR NETWORK SIL 8pin 4rs 220R
RN 18	174 221	RESISTOR NETWORK SIL 8pin 4rs 220R
RN 19	174 221	RESISTOR NETWORK SIL 8pin 4rs 220R
RN 20	174 221	RESISTOR NETWORK SIL 8pin 4rs 220R
RN 21	174 221	RESISTOR NETWORK SIL 8pin 4rs 220R
RN 22	174 221	RESISTOR NETWORK SIL 8pin 4rs 220R

COMPONENT LIST 115-0351 42M101 PCB ASSY ISSUE 2

RN 23	174 221	RESISTOR NETWORK SIL 8pin 4rs 220R
RN 24	174 221	RESISTOR NETWORK SIL 8pin 4rs 220R
RN 25	174 221	RESISTOR NETWORK SIL 8pin 4rs 220R
RN 26	174 221	RESISTOR NETWORK SIL 8pin 4rs 220R
RN 27	174 221	RESISTOR NETWORK SIL 8pin 4rs 220R
RN 28	174 221	RESISTOR NETWORK SIL 8pin 4rs 220R
RN 29	174 221	RESISTOR NETWORK SIL 8pin 4rs 220R
DN 1	10-0150	DIODE PACK 8 DIODES 1N4150
DN 2	10-0150	DIODE PACK 8 DIODES 1N4150
DN 3	10-0150	DIODE PACK 8 DIODES 1N4150
DN 4	10-0150	DIODE PACK 8 DIODES 1N4150
DN 5	10-0150	DIODE PACK 8 DIODES 1N4150
DN 6	10-0150	DIODE PACK 8 DIODES 1N4150
DN 7	10-0150	DIODE PACK 8 DIODES 1N4150
DN 8	10-0150	DIODE PACK 8 DIODES 1N4150
DN 9	10-0150	DIODE PACK 8 DIODES 1N4150
DN 10	10-0150	DIODE PACK 8 DIODES 1N4150
DN 11	115-0236	DIODE PACK 8 DIODE 1N5818
DN 12	115-0236	DIODE PACK 8 DIODE 1N5818
R 1	131 101	RESISTOR CARBON FILM 0.25W 5% 100R
R 2	131 470	RESISTOR CARBON FILM 0.25W 5% 47R
R 3	131 102	RESISTOR CARBON FILM 0.25W 5% 1K0
R 4	131 471	RESISTOR CARBON FILM 0.25W 5% 470R
R 5	131 471	RESISTOR CARBON FILM 0.25W 5% 470R
R 6	131 103	RESISTOR CARBON FILM 0.25W 5% 10K
R 7	131 222	RESISTOR CARBON FILM 0.25W 5% 2K2
D 1	284 150	DIODE 1N4150
D 2	284 150	DIODE 1N4150
D 3	284 150	DIODE 1N4150
D 4	285 818	DIODE 1N5818RL
D 5	285 818	DIODE 1N5818RL
D 6	285 818	DIODE 1N5818RL
D 7	285 818	DIODE 1N5818RL
D 8	285 818	DIODE 1N5818RL
D 9	285 818	DIODE 1N5818RL
D 10	285 818	DIODE 1N5818RL
D 11	285 818	DIODE 1N5818RL
D 12	284 150	DIODE 1N4150
D 13	284 150	DIODE 1N4150
D 14	288 202	DIODE ZENER 1.3W BZX 85 C3V3
D 15	284 150	DIODE 1N4150
D 16	284 150	DIODE 1N4150
D 17	284 150	DIODE 1N4150
D 18	284 150	DIODE 1N4150
D 19	284 150	DIODE 1N4150
D 20	284 150	DIODE 1N4150
D 21	284 150	DIODE 1N4150
C 1	123 100	CAP MULTILAYER CERAMIC 0.1uF 50V
C 2	123 100	CAP MULTILAYER CERAMIC 0.1uF 50V
C 3	123 100	CAP MULTILAYER CERAMIC 0.1uF 50V
C 4	121 103	CHIP CAPACITOR 10000pF 50V
C 5	121 103	CHIP CAPACITOR 10000pF 50V
C 6	121 103	CHIP CAPACITOR 10000pF 50V
C 7	121 103	CHIP CAPACITOR 10000pF 50V
C 8	121 103	CHIP CAPACITOR 10000pF 50V
C 9	121 103	CHIP CAPACITOR 10000pF 50V
C 10	121 103	CHIP CAPACITOR 10000pF 50V
C 11	121 103	CHIP CAPACITOR 10000pF 50V
C 12	121 103	CHIP CAPACITOR 10000pF 50V
C 13	121 103	CHIP CAPACITOR 10000pF 50V
C 14	121 103	CHIP CAPACITOR 10000pF 50V
C 15	121 103	CHIP CAPACITOR 10000pF 50V
C 16	121 103	CHIP CAPACITOR 10000pF 50V
C 17	121 103	CHIP CAPACITOR 10000pF 50V
C 18	121 103	CHIP CAPACITOR 10000pF 50V
C 19	121 103	CHIP CAPACITOR 10000pF 50V
C 20	121 103	CHIP CAPACITOR 10000pF 50V
C 21	121 103	CHIP CAPACITOR 10000pF 50V
C 22	121 103	CHIP CAPACITOR 10000pF 50V
C 23	121 103	CHIP CAPACITOR 10000pF 50V
C 24	121 103	CHIP CAPACITOR 10000pF 50V
C 25	121 103	CHIP CAPACITOR 10000pF 50V
C 26	121 103	CHIP CAPACITOR 10000pF 50V
C 27	121 103	CHIP CAPACITOR 10000pF 50V
C 28	121 103	CHIP CAPACITOR 10000pF 50V
C 29	121 103	CHIP CAPACITOR 10000pF 50V
C 30	121 103	CHIP CAPACITOR 10000pF 50V
C 31	121 103	CHIP CAPACITOR 10000pF 50V
C 32	121 103	CHIP CAPACITOR 10000pF 50V
C 33	121 103	CHIP CAPACITOR 10000pF 50V
C 34	121 103	CHIP CAPACITOR 10000pF 50V
C 35	121 103	CHIP CAPACITOR 10000pF 50V
C 36	121 103	CHIP CAPACITOR 10000pF 50V
C 37	121 103	CHIP CAPACITOR 10000pF 50V
C 38	121 103	CHIP CAPACITOR 10000pF 50V
C 39	121 103	CHIP CAPACITOR 10000pF 50V
C 40	121 103	CHIP CAPACITOR 10000pF 50V
C 41	121 103	CHIP CAPACITOR 10000pF 50V
C 42	121 103	CHIP CAPACITOR 10000pF 50V
C 43	121 103	CHIP CAPACITOR 10000pF 50V
M 1	115-0352	42M101 PCB (80-0062)
M 2	318 7512	IC 27512 EPROM 512K 250nS

ITEMS LIST 115-0100 40M100 MODULE ASSY ISSUE 2

ITEM	PART NO.		NO. OFF
1	115-0141	40M100 PCB ASSY	1
2	115-0121	40M100 COVER (9.5)-SCREENED	1
3	100-0067	PP39/PP40 TEXTOOL COVER MOULDING	1
4	432 103	SCREW PANHEAD SUPA STEEL M3 X 12	5
5	432 192	WASHER SHAKEPROOF M3	5
6	318 2256	EPROM 27256 250nS	1

ITEMS LIST 115-0210 40M101 MODULE ASSY ISSUE 2

ITEM	PART NO.		NO. OFF
1	115-0221	40M101 PCB ASSY	1
2	115-0252	40M101 TEXTOOL COVER SCREENED	1
3	110-0068	EXTENDED TEXTOOL SKT MOULDING	1
12	432 103	SCREW PANHEAD SUPA STEEL M3 X 12	4
13	432 104	SCREW PANHEAD SUPA STEEL M3 x 16	1
20	432 192	WASHER SHAKEPROOF M3	5
21	318 2256	IC 27256 EPROM 256K 250nS	1

ITEMS LIST 115-0320 40M102 MODULE ASSY ISSUE 3

ITEM	PART NO.		NO. OFF
1	115-0331	40M102 PCB ASSY	1
2	115-0322	40M102 TEXTOOL COVER SCREENED	1
3	110-0068	EXTENDED TEXTOOL SKT MOULDING	1
12	432 103	SCREW PANHEAD SUPA STEEL M3 X 12	4
13	432 104	SCREW PANHEAD SUPA STEEL M3 x 16	1
20	432 192	WASHER SHAKEPROOF M3	5
21	318 7256	256K E-PROM	1

ITEMS LIST 115-0130 41M100 2 512K EPROM 27512
1

ITEMS LIST 115-0250 41M101 MODULE ASSY ISSUE 3

ITEM	PART NO.		NO. OFF
1	115-0221	40M101 PCB ASSY	1
2	115-0256	41M101 TEXTOOL COVER SCREENED	1
3	110-0068	EXTENDED TEXTOOL SKT MOULDING	1
12	432 103	SCREW PANHEAD SUPA STEEL M3 X 12	4
13	432 104	SCREW PANHEAD SUPA STEEL M3 x 16	1
20	432 192	WASHER SHAKEPROOF M3	5
21	318 7512	IC 27512 EPROM 512K 250nS	1

ITEMS LIST 115-0360 41M102 MODULE ASSY ISSUE 3

ITEM	PART NO.		NO. OFF
1	115-0331	40M102 PCB ASSY	1
2	115-0362	41M102 COVER - SCREENED	1
3	110-0068	EXTENDED TEXTOOL SKT MOULDING	1
12	432 103	SCREW PANHEAD SUPA STEEL M3 X 12	4
14	432 104	SCREW PANHEAD SUPA STEEL M3 x 16	1
20	432 192	WASHER SHAKEPROOF M3	5
21	318 7512	512K EPROM 27512	1

ITEMS LIST 115-0260 41M200 MODULE ASSY ISSUE 1

ITEM	PART NO.		NO. OFF
1	115-0271	41M200 MODULE PCB ASSY	1
2	115-0262	41M200 COVER (9.5)-SCREENED	1
3	110-0068	EXTENDED TEXTOOL SKT MOULDING	1
11	432 104	SCREW PANHEAD SUPA STEEL M3 x 16	1
12	432 103	SCREW PANHEAD SUPA STEEL M3 X 12	4
20	432 192	WASHER SHAKEPROOF M3	5

ITEMS LIST 115-0180 42M100 MODULE ASSY ISSUE 3

ITEM	PART NO.		NO. OFF
1	115-0201	42M100 MODULE PCB ASSY	1
2	115-0181	42M100 TEXTOOL COVER-SCREENED	1
3	100-0067	PP39/PP40 TEXTOOL COVER MOULDING	1
12	432 103	SCREW PANHEAD SUPA STEEL M3 X 12	5
20	432 192	WASHER SHAKEPROOF M3	5

ITEMS LIST 115-0340 42M101 MODULE ASSY ISSUE 2

ITEM	PART NO.		NO. OFF
1	115-0351	42M101 PCB ASSY	1
2	115-0342	42M101 TEXTOOL COVER SCREENED	1
3	110-0068	EXTENDED TEXTOOL SKT MOULDING	1
12	432 103	SCREW PANHEAD SUPA STEEL M3 X 12	4
13	432 104	SCREW PANHEAD SUPA STEEL M3 x 16	1
20	432 192	WASHER SHAKEPROOF M3	5

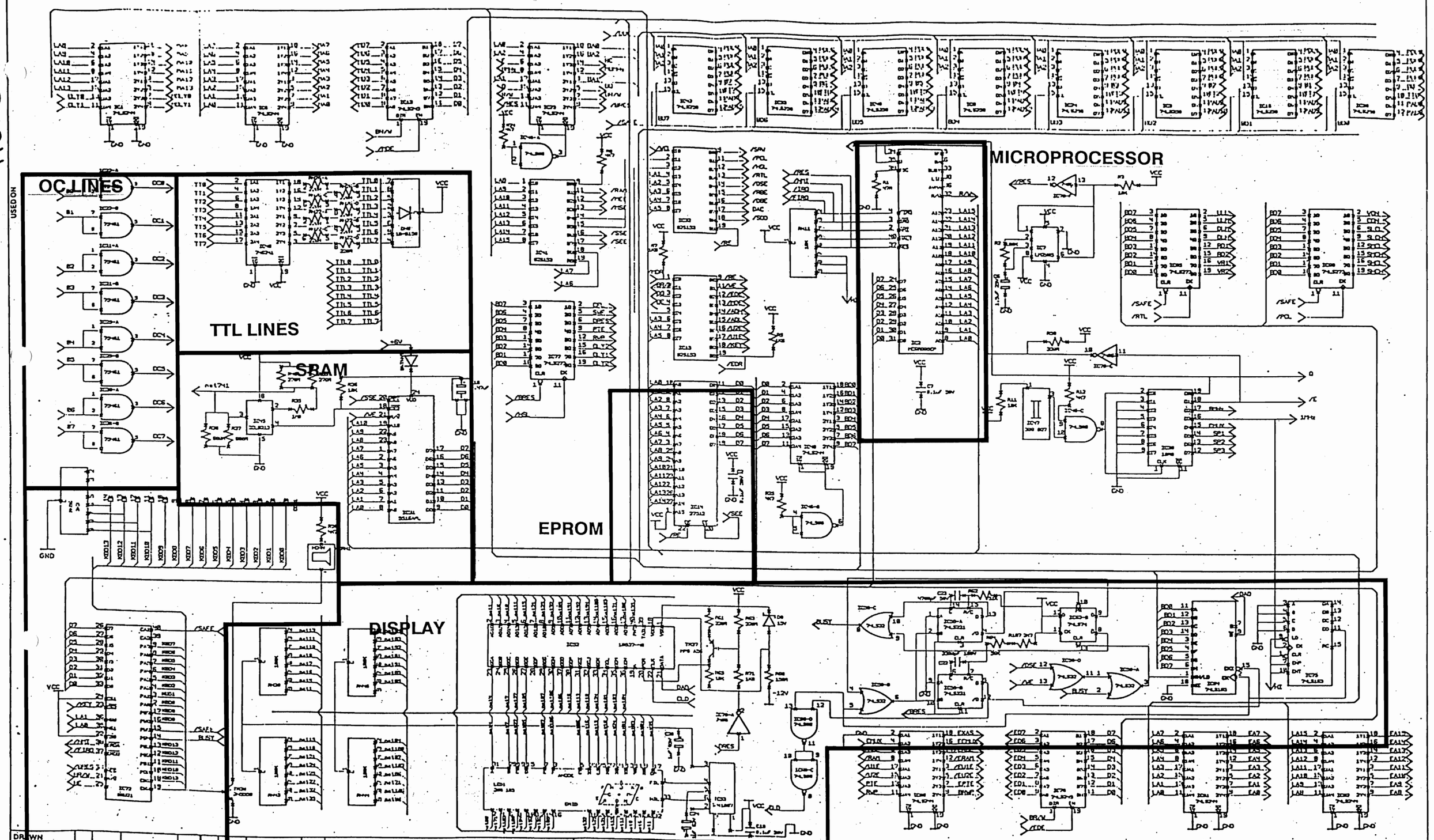

DRAWN RW								
TRACED	4	12-8-86	CIS 876					
CHECKED	2	20-5-86	CIS 874					
APPROVED	1	4-4-86	CIS 809					
	ISS	DATE	CHANGE No	APP	ISS	DATE	CHANGE No	APP

LIMITS UNLESS OTHERWISE STATED
1 DECIMAL PLACE ±1.0mm
2 DECIMAL PLACES ±0.4mm
3 DECIMAL PLACES ±0.1mm
ANGLES ± 0°
THREADS TO BS 1580
DIMENSIONS APPLY AFTER FINISHING
REMOVE ALL BURRS AND SHARP EDGES

DIMENSIONS IN
MATERIAL
FINISH
SCALE .

stag electronic designs LTD

TITLE
PP40 MAIN SYSTEM P C B
CIRCUIT DIAGRAM

THIS DRAWING DOCUMENT IS ISSUED BY STAG ELECTRONIC DESIGNS LTD ON THE UNDERSTANDING THAT IT IS STRICTLY CONFIDENTIAL AND MAY NOT BE REPRODUCED OR UTILISED IN ANY WAY WITHOUT THE PRIOR WRITTEN PERMISSION OF THE COMPANY

DRG No
110-0030

SHT 1 OF 5

USED ON
110-0031

IF IN DOUBT - ASK!

REMOVE ALL BURRS AND SHARP EDGES

THIRD ANGLE PROJECTION

ISS	CHANGES (DETAILS ONLY)

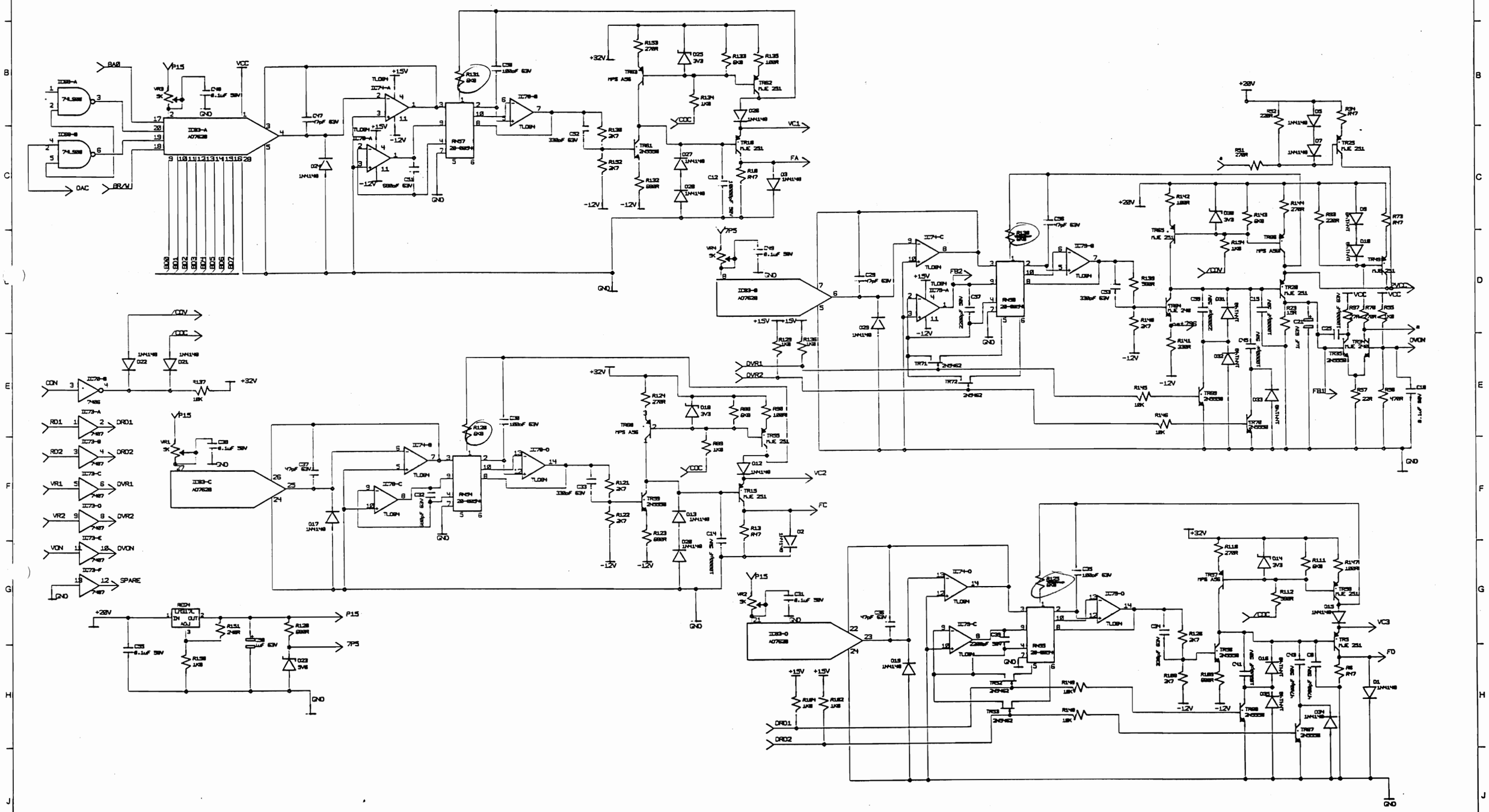

DRAWN R.W.	5	6·11·87	C.I.S. 1183	
CHECKED	4	12·8·86	C.I.S. 876	
	3	21·5·86	C.I.S. 843	
ENGINEERING	2	20·5·86	C.I.S. 824	
APPROVED T.C.W.	1	4·4·86	C.I.S. 809	
	ISS	DATE	CHANGE No	APP

LIMITS UNLESS OTHERWISE STATED
1 DECIMAL PLACE ± 0.4mm
2 DECIMAL PLACES ± 0.25mm
3 DECIMAL PLACES ± 0.15mm

THREADS TO BS 1580
DIMENSIONS APPLY AFTER FINISHING

DIMENSIONS IN ____ SCALE ____
MATERIAL ____
FINISH ____

stag electronic designs ltd

TITLE
PP40 MAIN SYSTEM P.C.B. CIRCUIT DIAGRAM.

THIS DRAWING DOCUMENT IS ISSUED BY STAG ELECTRONIC DESIGNS LTD ON THE UNDERSTANDING THAT IT IS STRICTLY CONFIDENTIAL AND MAY NOT BE REPRODUCED OR UTILISED IN ANY WAY WITHOUT THE PRIOR WRITTEN PERMISSION OF THE COMPANY.

DRG. No.
110-0030
SHT. 2 OF 5

USED ON
110-0031

IF IN DOUBT - ASK!

REMOVE ALL BURRS AND SHARP EDGES

THIRD ANGLE PROJECTION

ISS	CHANGES (DETAILS ONLY)

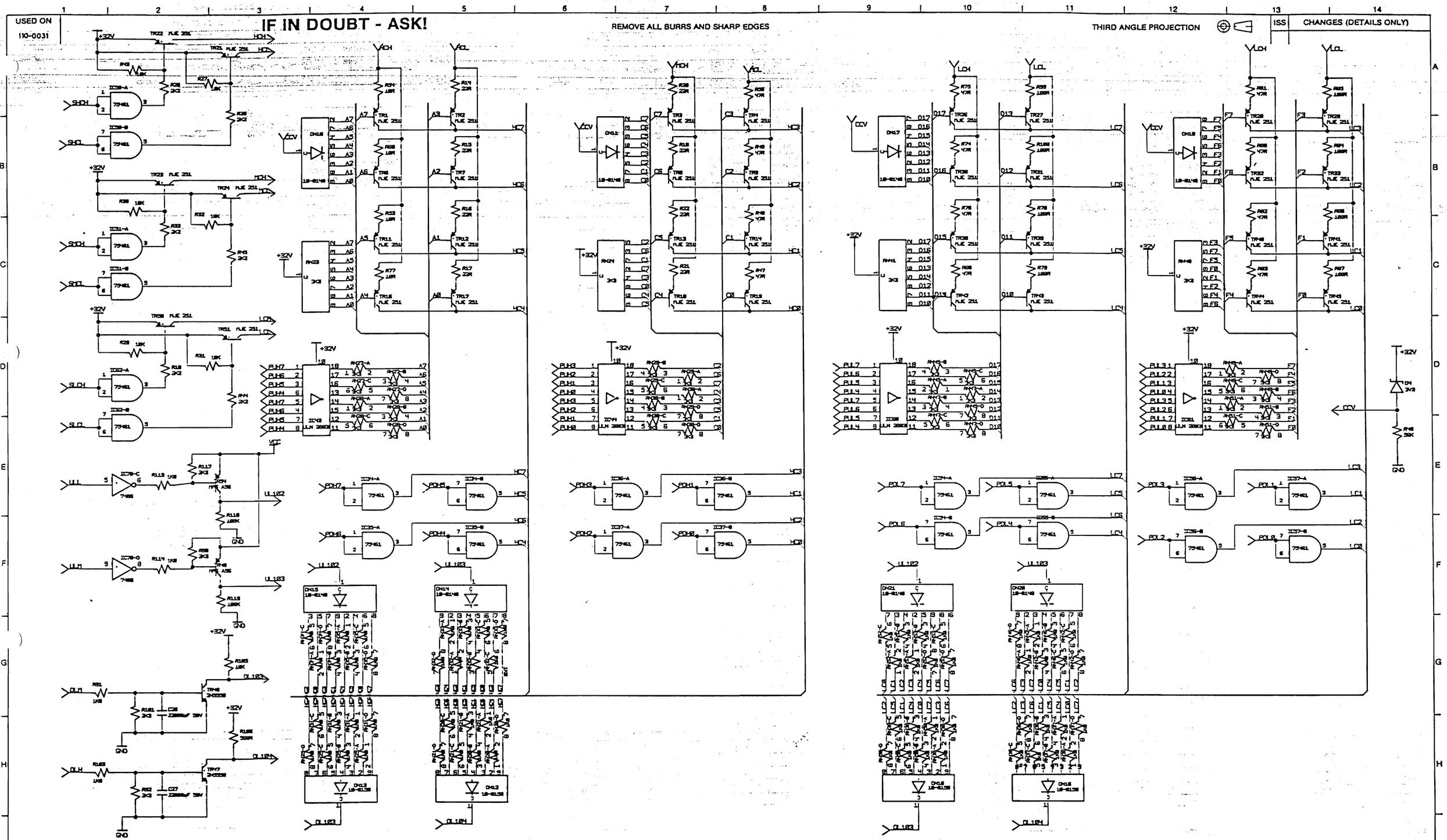

DRAWN R.W.	5	6-11-87	C.I.S. 1183																
CHECKED	4	12-8-86	C.I.S. 876																
ENGINEERING	3	21-5-86	C.I.S. 843																
	2	20-5-86	C.I.S. 824																
APPROVED T.C.C.	1	4-4-86	C.I.S. 809																
	ISS	DATE	CHANGE No	APP	ISS	DATE	CHANGE No	APP	ISS	DATE	CHANGE No	APP							

LIMITS UNLESS OTHERWISE STATED
1 DECIMAL PLACE ± 0.4mm
2 DECIMAL PLACES ± 0.25mm
3 DECIMAL PLACES ± 0.15mm

THREADS TO BS 1580
DIMENSIONS APPLY AFTER FINISHING

DIMENSIONS IN
SCALE
MATERIAL
FINISH

stag electronic designs LTD

TITLE
PP40 MAIN SYSTEM P.C.B. CIRCUIT DIAGRAM

THIS DRAWING DOCUMENT IS ISSUED BY STAG ELECTRONIC DESIGNS LTD ON THE UNDERSTANDING THAT IT IS STRICTLY CONFIDENTIAL AND MAY NOT BE REPRODUCED OR UTILISED IN ANY WAY WITHOUT THE PRIOR WRITTEN PERMISSION OF THE COMPANY.

DRG. No.
110-0030
SHT. 3 OF 5

USED ON
110-0031

IF IN DOUBT - ASK!

REMOVE ALL BURRS AND SHARP EDGES

THIRD ANGLE PROJECTION

ISS	CHANGES (DETAILS ONLY)

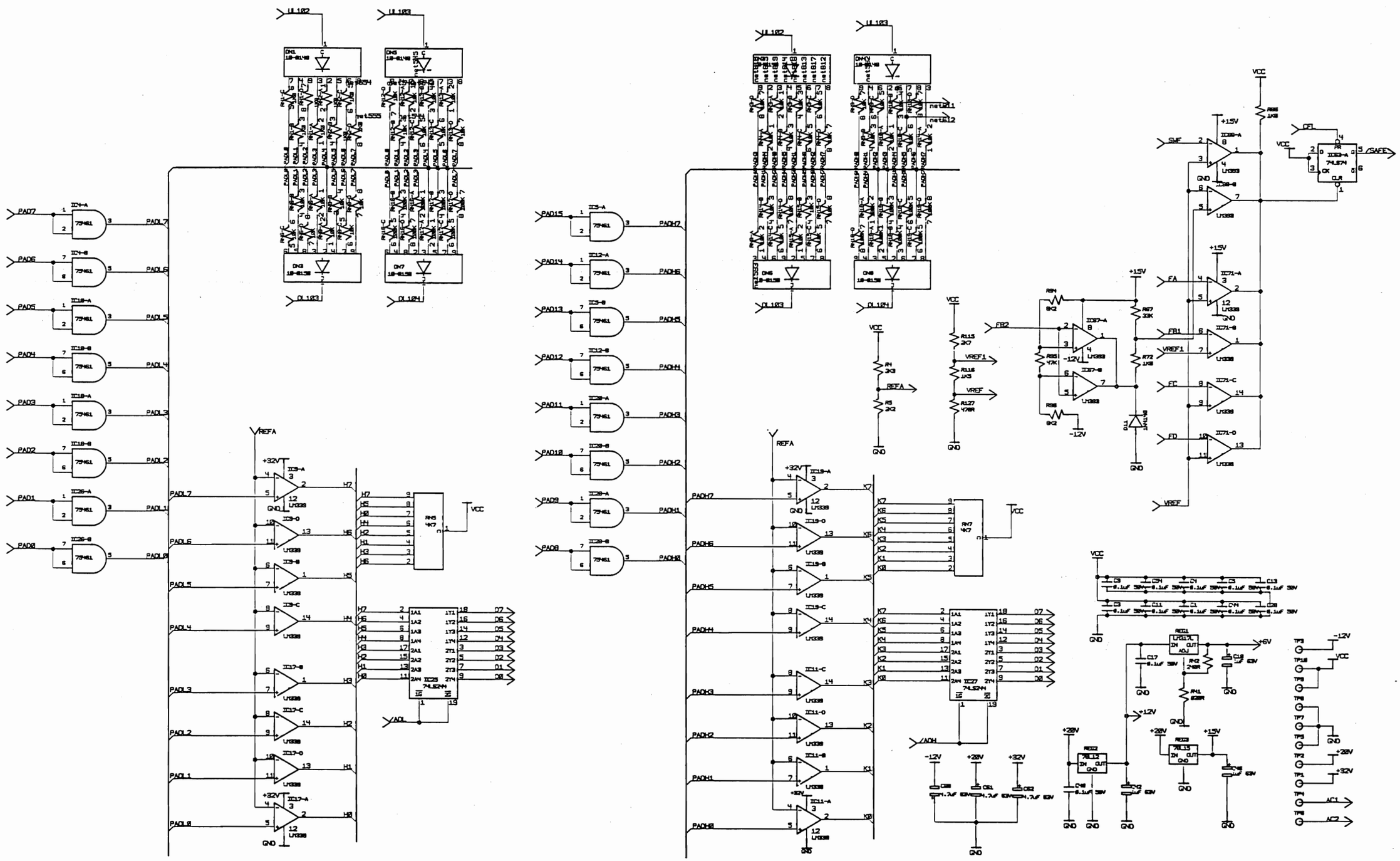

DRAWN	ISS	DATE	CHANGE No	APP	ISS	DATE	CHANGE No	APP	ISS	DATE	CHANGE No	APP
R.W.	5	6·11·87	C.I.S. 1183									
CHECKED	4	12·8·86	C.I.S. 876									
	3	21·5·86	C.I.S. 843									
ENGINEERING	2	20·5·86	C.I.S. 824									
APPROVED	1	4·4·86	C.I.S. 809									

LIMITS UNLESS OTHERWISE STATED
1 DECIMAL PLACE ± 0.4mm
2 DECIMAL PLACES ± 0.25mm
3 DECIMAL PLACES ± 0.15mm

THREADS TO BS 1580
DIMENSIONS APPLY AFTER FINISHING

DIMENSIONS IN ____ SCALE ____
MATERIAL ____
FINISH ____

stag electronic designs LTD

TITLE
PP40 MAIN SYSTEM P.C.B. CIRCUIT DIAGRAM.

THIS DRAWING DOCUMENT IS ISSUED BY STAG ELECTRONIC DESIGNS LTD ON THE UNDERSTANDING THAT IT IS STRICTLY CONFIDENTIAL AND MAY NOT BE REPRODUCED OR UTILISED IN ANY WAY WITHOUT THE PRIOR WRITTEN PERMISSION OF THE COMPANY.

DRG. No.
110-0030
SHT. 4 OF 5

USED ON 110-0031

IF IN DOUBT - ASK!

REMOVE ALL BURRS AND SHARP EDGES

THIRD ANGLE PROJECTION

ISS	CHANGES (DETAILS ONLY)

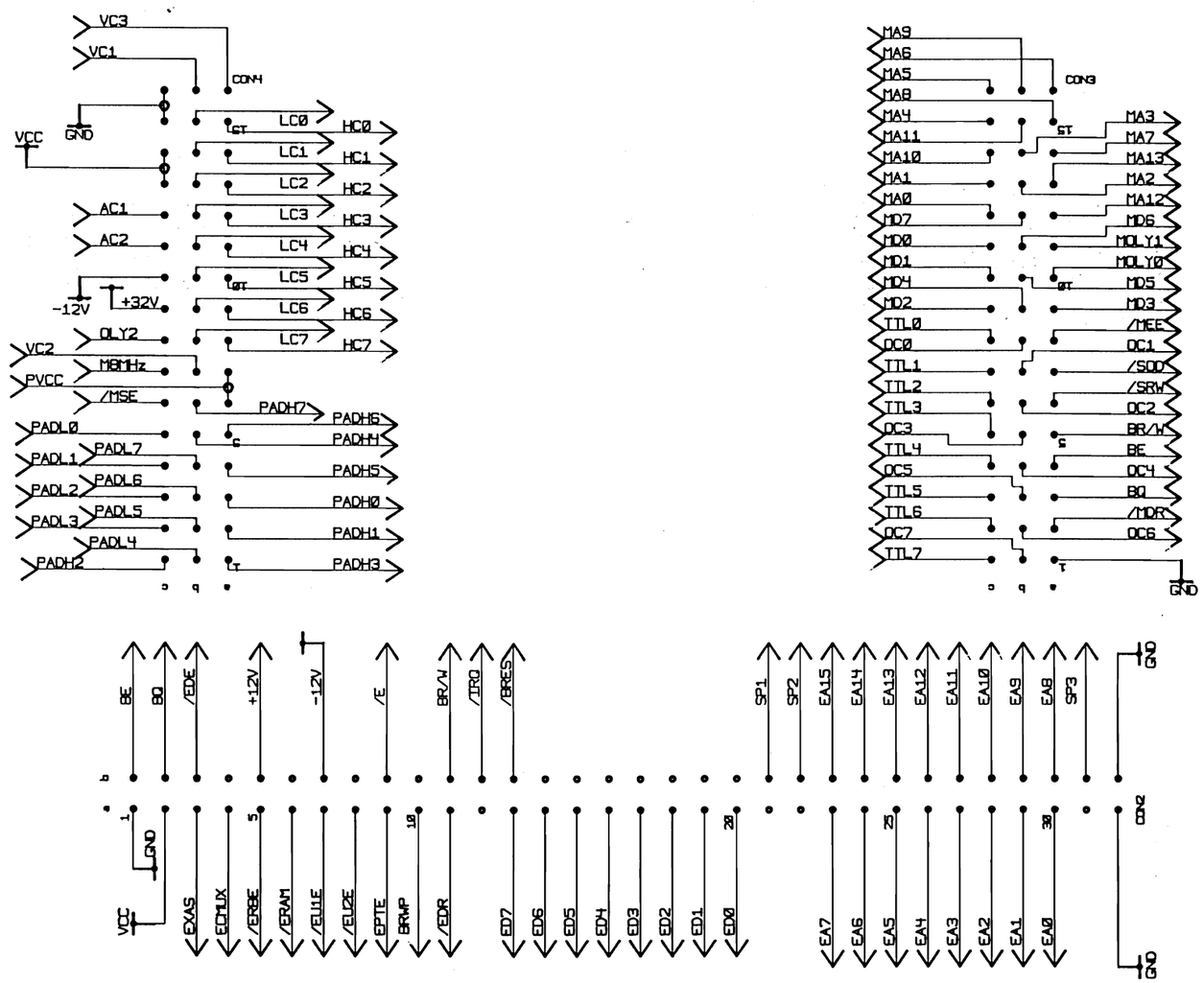

DRAWN R.W.	5	6·11·87	C.I.S. 1183	T.C.C.				
CHECKED	4	12·8·86	C.I.S. 876					
	3	21·5·86	C.I.S. 843					
ENGINEERING	2	20·5·86	C.I.S. 824					
APPROVED T.C.C.	1	4·4·86	C.I.S. 809					
	ISS	DATE	CHANGE No	APP	ISS	DATE	CHANGE No	APP

LIMITS UNLESS OTHERWISE STATED
1 DECIMAL PLACE ± 0.4mm
2 DECIMAL PLACES ± 0.25mm
3 DECIMAL PLACES ± 0.15mm
ANGLES ± ½°

THREADS TO BS 1580
DIMENSIONS APPLY AFTER FINISHING

DIMENSIONS IN ____ SCALE ____

MATERIAL ____

FINISH ____

stag ELECTRONIC DESIGNS LTD

TITLE
PP40 MAIN SYSTEM P.C.B.
CIRCUIT DIAGRAM

THIS DRAWING DOCUMENT IS ISSUED BY STAG ELECTRONIC DESIGNS LTD ON THE UNDERSTANDING THAT IT IS STRICTLY CONFIDENTIAL AND MAY NOT BE REPRODUCED OR UTILISED IN ANY WAY WITHOUT THE PRIOR WRITTEN PERMISSION OF THE COMPANY.

DRG. No. 110-0030

SHT. 5 OF 5

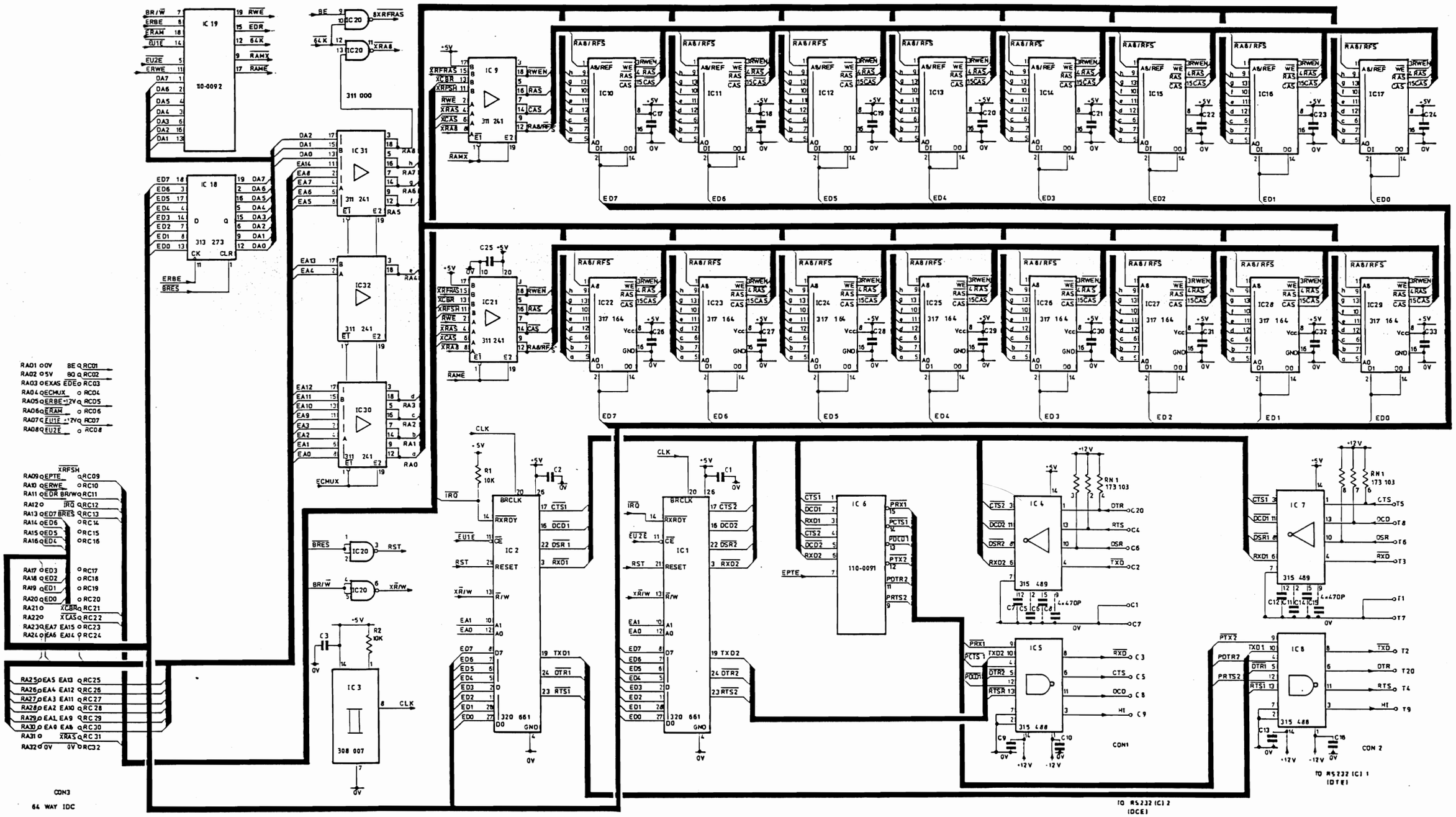

	ISS	DATE	CHANGE No	APP	ISS	DATE	CHANGE No	APP
DWN A.A.C.								
TRACED CIRCUITPLAN.	3	4·4·86	C I S 810					
CHECKED	2	4·12·85	C.I.S. 791					
APPROVED	1	29·4·85	C.I.S. 713					

LIMITS UNLESS OTHERWISE STATED
1 DECIMAL PLACE ± 1·0mm.
2 DECIMAL PLACES ± 0·4mm
3 DECIMAL PLACES ± 0·1mm.
ANGLES ± ½°
THREADS TO BS 1580
DIMENSIONS APPLY AFTER FINISHING.
REMOVE ALL BURRS AND SHARP EDGES

DIMENSIONS IN ___ SCALE ___
MATERIAL ___
FINISH ___

stag ELECTRONIC DESIGNS LTD

TITLE
PP40 RAM I/O (0·5 Mb RAM) P.C.B.
CIRCUIT DIAGRAM.

THIS DRAWING DOCUMENT IS ISSUED BY STAG ELECTRONIC DESIGNS LTD ON THE UNDERSTANDING THAT IT IS STRICTLY CONFIDENTIAL AND MAY NOT BE REPRODUCED OR UTILISED IN ANY WAY WITHOUT THE PRIOR WRITTEN PERMISSION OF THE COMPANY

DRG No
110-0080

USED ON

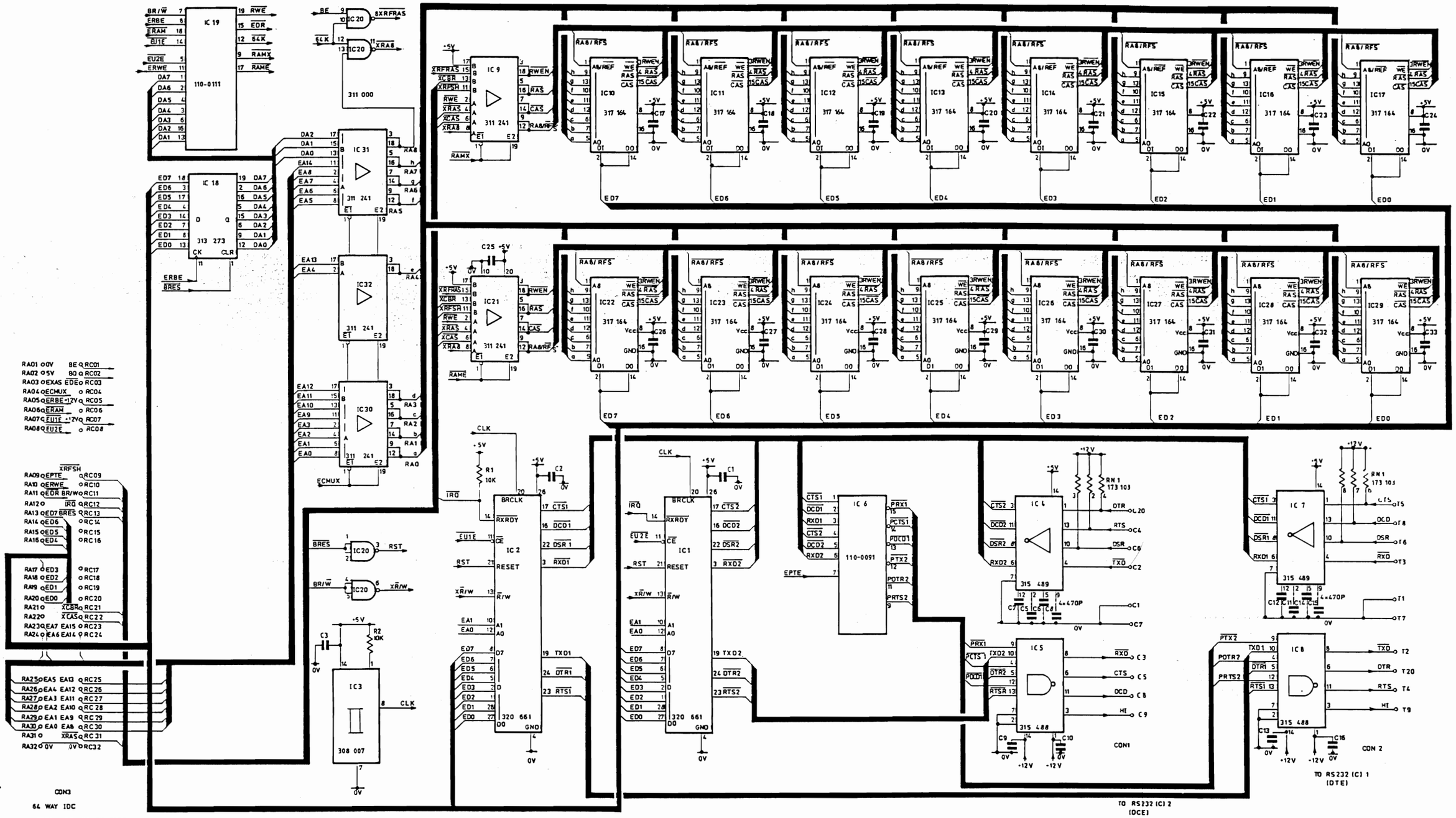

DRWN A.A.C.								
TRACED CIRCUITPLAN.								
CHECKED	2	4·12·85	C.I.S. 791					
APPROVED	1	29·4·85	C.I.S. 713					
	ISS	DATE	CHANGE No	APP	ISS	DATE	CHANGE No	APP

LIMITS UNLESS OTHERWISE STATED
1 DECIMAL PLACE ± 1·0mm.
2 DECIMAL PLACES ± 0·4mm
3 DECIMAL PLACES ± 0·1mm.
ANGLES ± ½°
THREADS TO BS 1580
DIMENSIONS APPLY AFTER FINISHING.
REMOVE ALL BURRS AND SHARP EDGES

DIMENSIONS IN ——
SCALE ——
MATERIAL ——
FINISH ——

stag electronic designs LTD

TITLE
PP40 RAM I/O (1·0 Mb RAM) P.C.B.
CIRCUIT DIAGRAM.

THIS DRAWING, DOCUMENT IS ISSUED BY STAG ELECTRONIC DESIGNS LTD ON THE UNDERSTANDING THAT IT IS STRICTLY CONFIDENTIAL AND MAY NOT BE REPRODUCED OR UTILISED IN ANY WAY WITHOUT THE PRIOR WRITTEN PERMISSION OF THE COMPANY

DRG No
110-0100

110-0120

USED ON

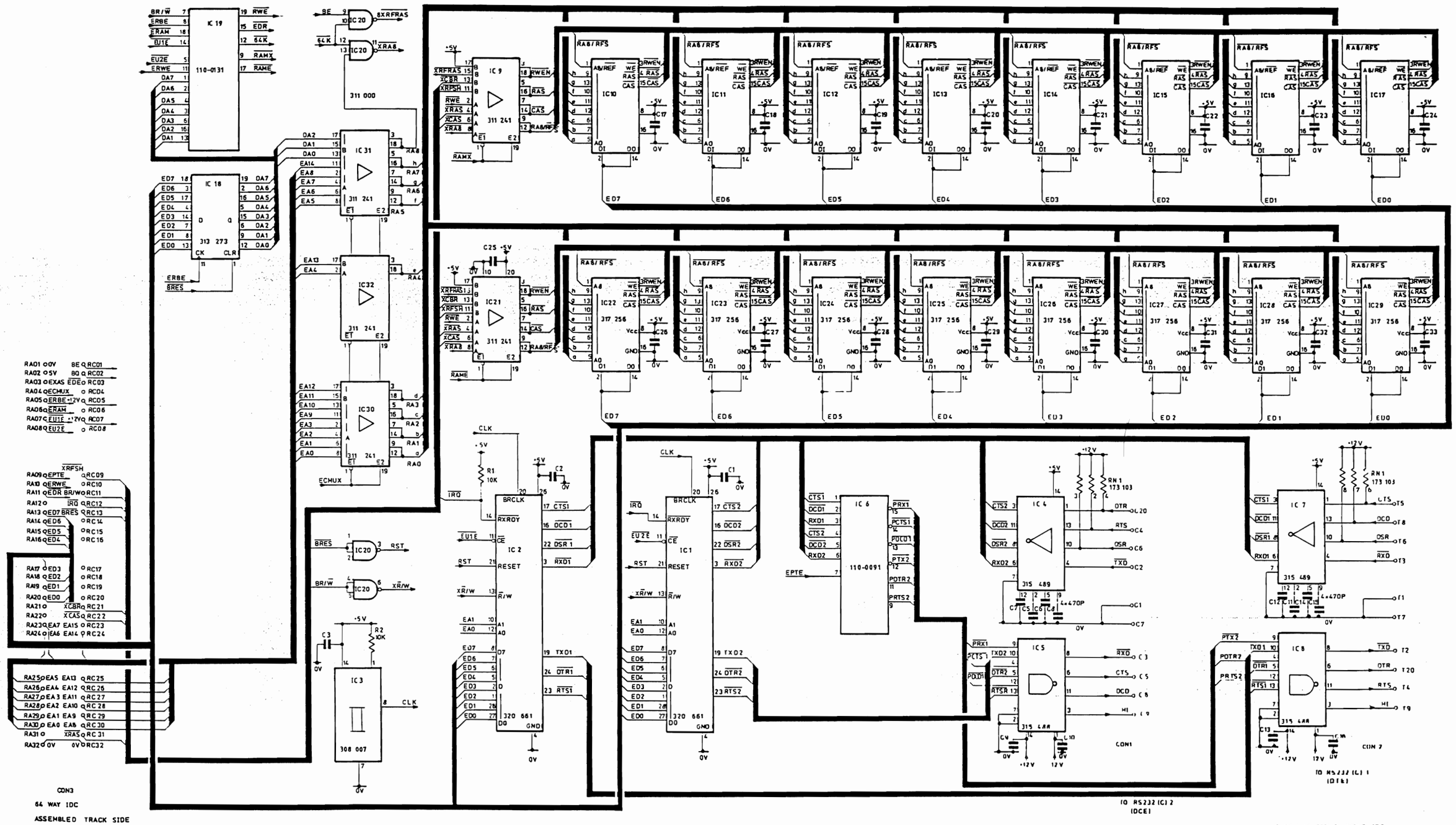

ALL UNMARKED CAPACITORS 0u1

NOTE
RAM IC'S 10 TO 17
NOT FITTED

DRAWN A.A.C.								
TRACED CIRCUITPLAN.								
CHECKED	2	4·12·85	C.I.S. 791					
APPROVED	1	29·4·85	C.I.S. 713					
	ISS	DATE	CHANGE No	APP	ISS	DATE	CHANGE No	APP

LIMITS UNLESS OTHERWISE STATED
1 DECIMAL PLACE ± 1·0mm.
2 DECIMAL PLACES ± 0·4mm.
3 DECIMAL PLACES ± 0·1mm.
ANGLES ± ½°
THREADS TO BS 1580
DIMENSIONS APPLY AFTER FINISHING.
REMOVE ALL BURRS AND SHARP EDGES

DIMENSIONS IN ___ SCALE ___
MATERIAL ___
FINISH ___

stag electronic designs LTD

TITLE
PP40 RAM I/O (2·0 Mb RAM) P.C.B.
CIRCUIT DIAGRAM.

THIS DRAWING DOCUMENT IS ISSUED BY STAG ELECTRONIC DESIGNS LTD ON THE UNDERSTANDING THAT IT IS STRICTLY CONFIDENTIAL AND MAY NOT BE REPRODUCED OR UTILISED IN ANY WAY WITHOUT THE PRIOR WRITTEN PERMISSION OF THE COMPANY

DRG No
110-0120

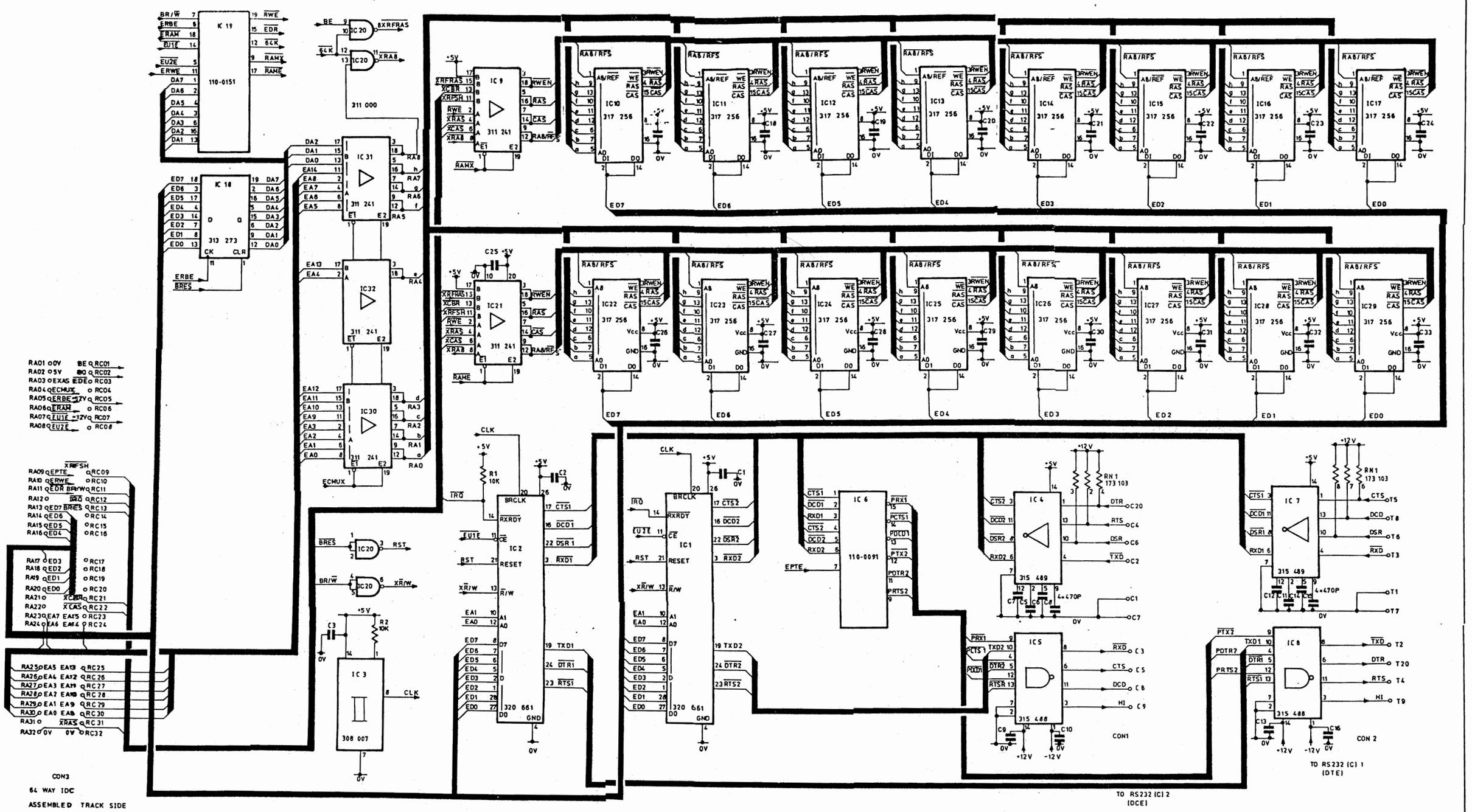

DRAWN A.A.C.								
RACED CIRCUITPLAN.								
CHECKED	2	4·12·85	C.I.S. 791					
APPROVED	1	29·4·85	C.I.S. 713					
	ISS	DATE	CHANGE No	APP	ISS	DATE	CHANGE No	APP

LIMITS UNLESS OTHERWISE STATED
1 DECIMAL PLACE ± 1·0mm.
2 DECIMAL PLACES ± 0·4mm.
3 DECIMAL PLACES ± 0·1mm.
ANGLES ± ½°
THREADS TO BS 1580
DIMENSIONS APPLY AFTER FINISHING.
REMOVE ALL BURRS AND SHARP EDGES

DIMENSIONS IN ___
MATERIAL ___
FINISH ___
SCALE ___

stag electronic designs LTD

TITLE
PP40 RAM I/O (4·0 Mb RAM) P.C.B.
CIRCUIT DIAGRAM.

THIS DRAWING DOCUMENT IS ISSUED BY STAG ELECTRONIC DESIGNS LTD ON THE UNDERSTANDING THAT IT IS STRICTLY CONFIDENTIAL AND MAY NOT BE REPRODUCED OR UTILISED IN ANY WAY WITHOUT THE PRIOR WRITTEN PERMISSION OF THE COMPANY

DRG No
110-0140

110-0180 Sht 1.

USED ON

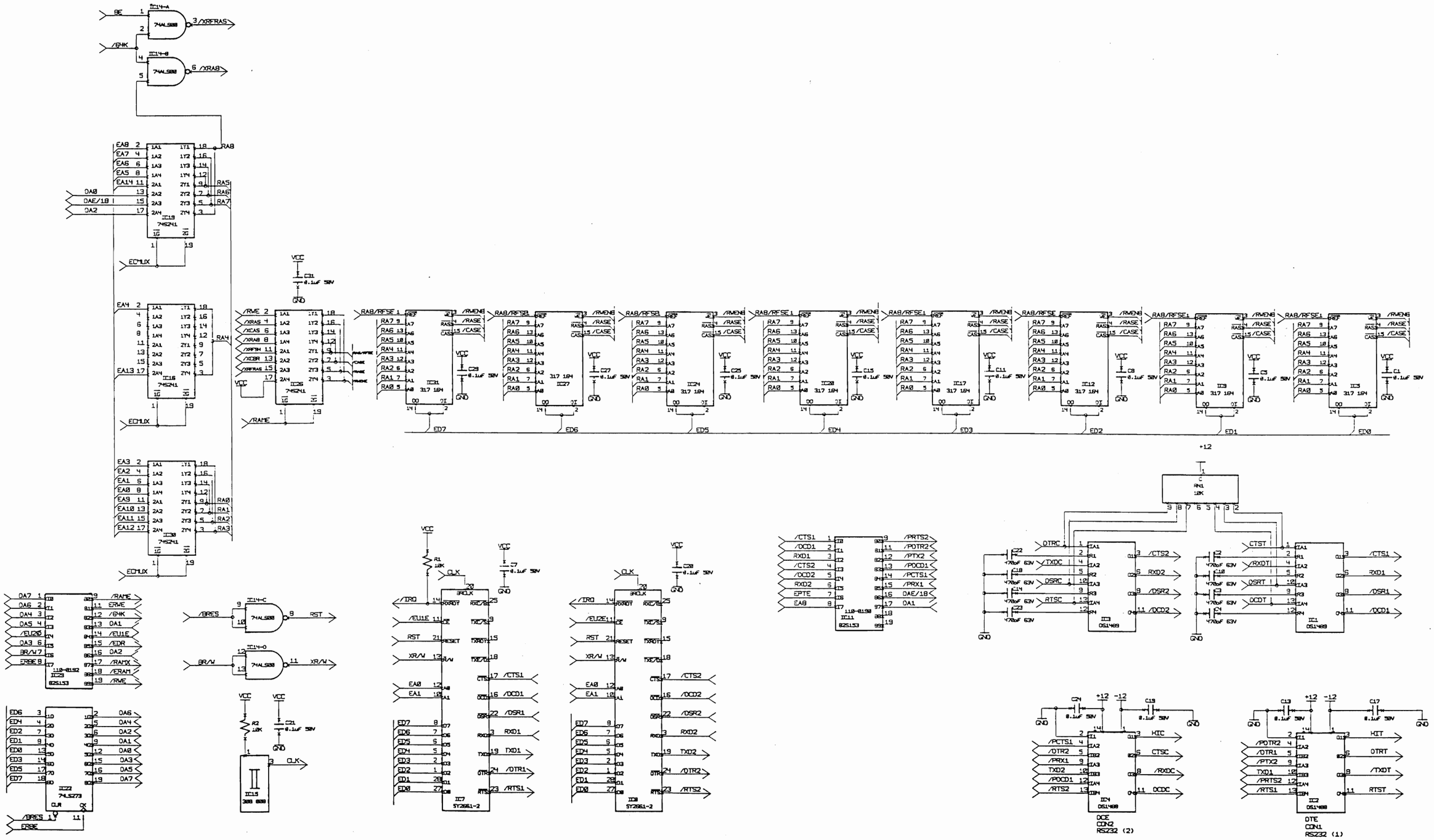

DRAWN R.W.									LIMITS UNLESS OTHERWISE STATED	DIMENSIONS IN	SCALE	stag electronic designs LTD	THIS DRAWING DOCUMENT IS ISSUED BY STAG ELECTRONIC DESIGNS LTD ON THE UNDERSTANDING THAT IT IS STRICTLY CONFIDENTIAL AND MAY NOT BE REPRODUCED OR UTILISED IN ANY WAY WITHOUT THE PRIOR WRITTEN PERMISSION OF THE COMPANY
TRACED									1 DECIMAL PLACE ±1.0mm. THREADS TO BS 1580	MATERIAL			
CHECKED									2 DECIMAL PLACES ±0.4mm. DIMENSIONS APPLY				
									3 DECIMAL PLACES ±0.1mm. AFTER FINISHING.				
APPROVED	1	16.6.86	C.I.S.849						ANGLES ± 1/2° REMOVE ALL BURRS AND SHARP EDGES	FINISH	TITLE PP40 RAM I/O (0.5Mb RAM) P.C.B. CIRCUIT DIAGRAM.		DRG No 110-0180
	ISS	DATE	CHANGE No.	APP	ISS	DATE	CHANGE No.	APP					SHT. 1 OF 2

MASTERANGE M63

SHT 2 OF 2

USED ON

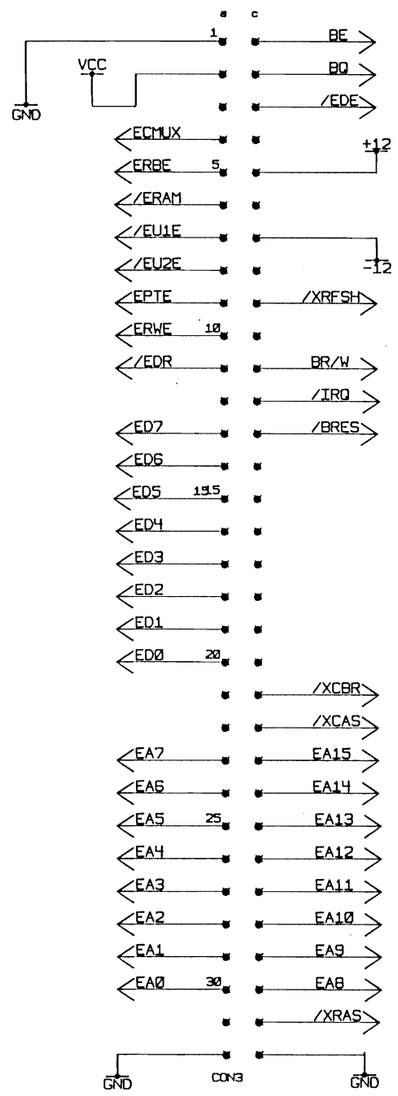

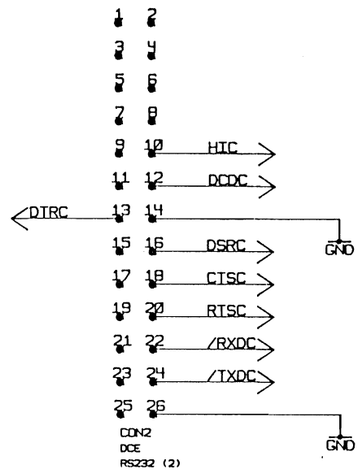

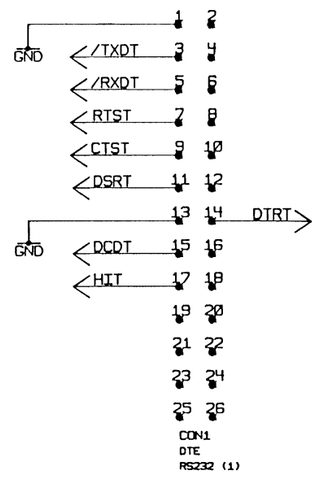

DRAWN RM				
TRACED				
CHECKED	2	14·7·86	CIS 860	
APPROVED	1	17·6·86	CIS 849	
	ISS	DATE	CHANGE No	APP

MASTERANGE M69

LIMITS UNLESS OTHERWISE STATED
1 DECIMAL PLACE ± 1.0mm.
2 DECIMAL PLACES ± 0.4mm.
3 DECIMAL PLACES ± 0.1mm.
ANGLES ± ½°
THREADS TO BS 1580
DIMENSIONS APPLY AFTER FINISHING.
REMOVE ALL BURRS AND SHARP EDGES

DIMENSIONS IN ____ SCALE ____
MATERIAL ____
FINISH ____

stag electronic designs LTD

THIS DRAWING DOCUMENT IS ISSUED BY STAG ELECTRONIC DESIGNS LTD ON THE UNDERSTANDING THAT IT IS STRICTY CONFIDENTIAL AND MAY NOT BE REPRODUCED OR UTILISED IN ANY WAY WITHOUT THE PRIOR WRITTEN PERMISSION OF THE COMPANY

TITLE
PP40 PROM I/O (0·5Mb) P.C.B.
CIRCUIT DIAGRAM

DRG No
110-0180
SHT. 2 OF 2

110-0200 Sht 1

USED ON

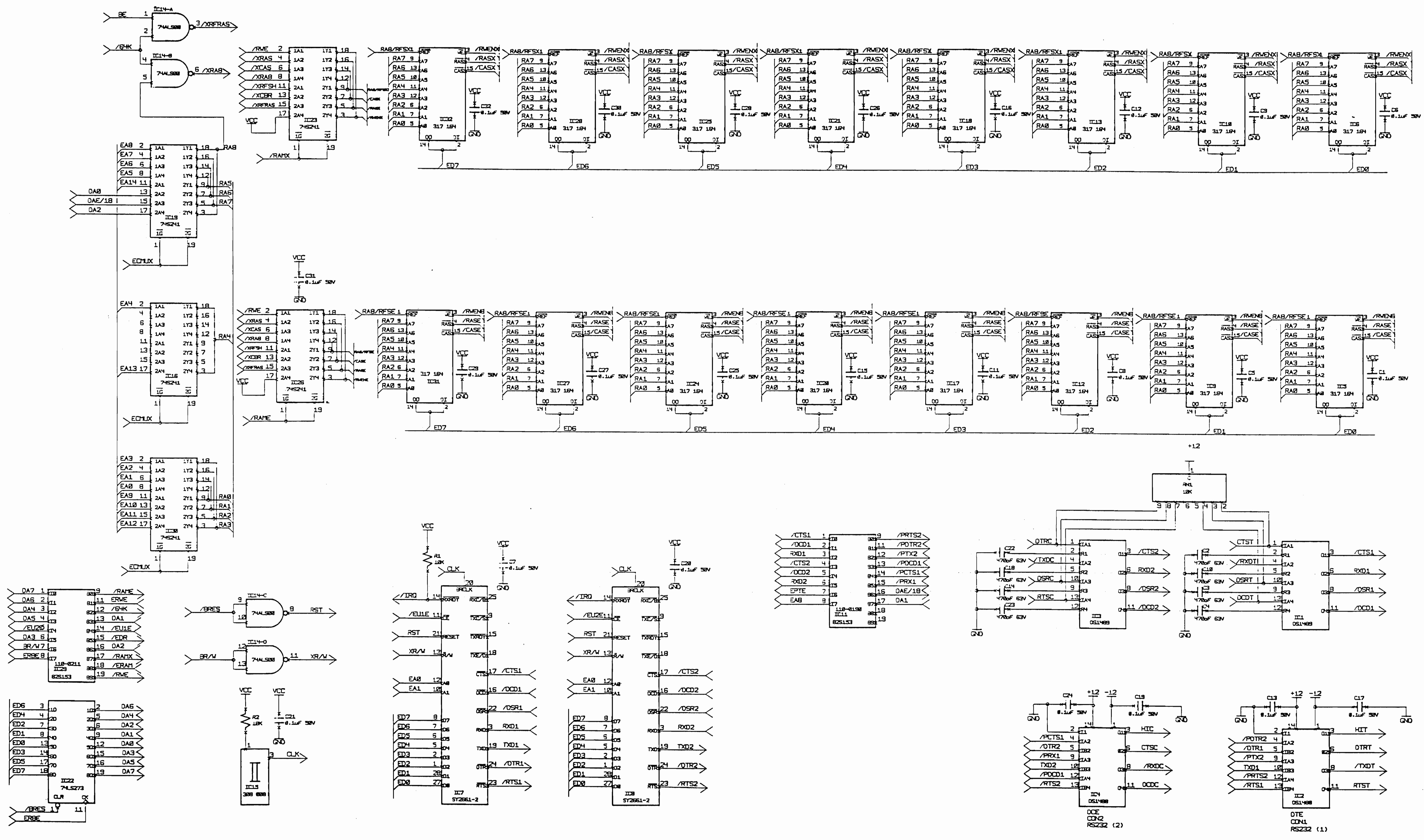

DRAWN R.W.								
TRACED								
CHECKED								
APPROVED	1	17.6.86	C.I.S. 849					
	ISS	DATE	CHANGE No.	APP	ISS	DATE	CHANGE No.	APP

MASTERANGE M63

LIMITS UNLESS OTHERWISE STATED

1 DECIMAL PLACE ±1.0mm.
2 DECIMAL PLACES ±0.4mm.
3 DECIMAL PLACES ±0.1mm.
ANGLES ± 1/2°

THREADS TO BS 1580
DIMENSIONS APPLY AFTER FINISHING.
REMOVE ALL BURRS AND SHARP EDGES

DIMENSIONS IN

SCALE

MATERIAL

FINISH

stag electronic designs LTD

THIS DRAWING DOCUMENT IS ISSUED BY STAG ELECTRONIC DESIGNS LTD ON THE UNDERSTANDING THAT IT IS STRICTLY CONFIDENTIAL AND MAY NOT BE REPRODUCED OR UTILISED IN ANY WAY WITHOUT THE PRIOR WRITTEN PERMISSION OF THE COMPANY

TITLE

PP40 RAM I/O (1.0Mb RAM) P.C.B. CIRCUIT DIAGRAM.

DRG No

110 - 0200

SHT. 2 OF 2

USED ON

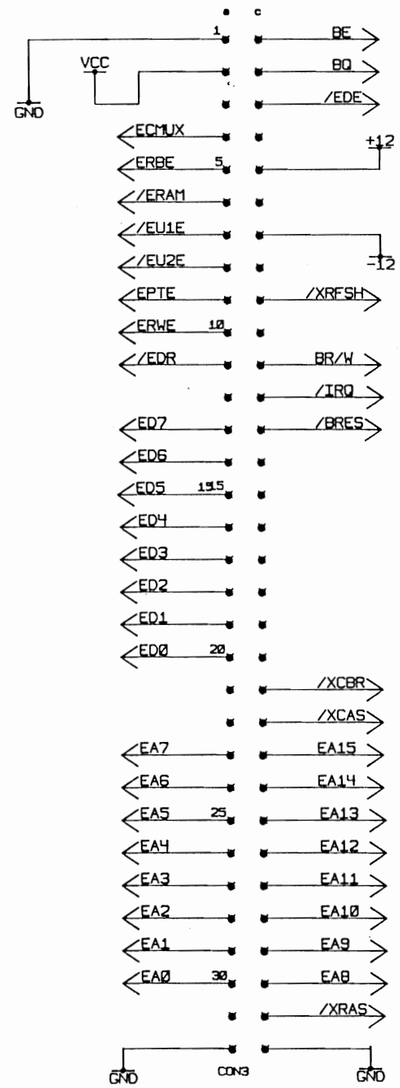

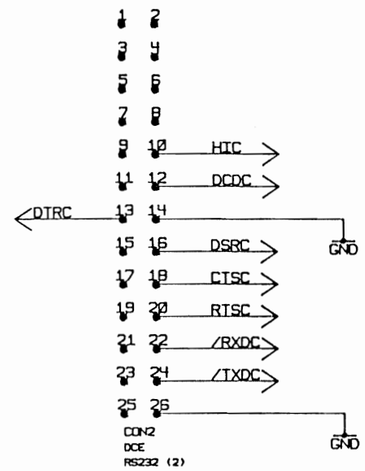

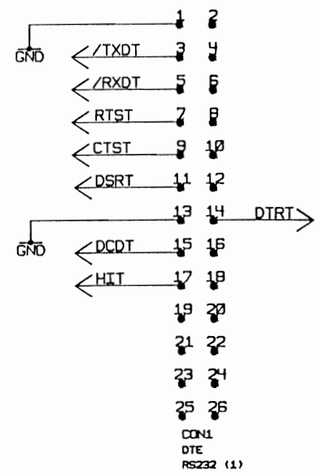

DRAWN RW					
TRACED					
CHECKED	2	14·7·86	C.I.S. 860		
APPROVED	1	17·6·86	C.I.S. 849		
	ISS	DATE	CHANGE No	APP	

MASTERANGE M69

LIMITS UNLESS OTHERWISE STATED
1 DECIMAL PLACE ± 1.0mm.
2 DECIMAL PLACES ± 0.4mm.
3 DECIMAL PLACES ± 0.1mm.
ANGLES ± ½°
THREADS TO BS 1580
DIMENSIONS APPLY AFTER FINISHING.
REMOVE ALL BURRS AND SHARP EDGES

DIMENSIONS IN | SCALE
MATERIAL
FINISH

stag ELECTRONIC DESIGNS LTD

THIS DRAWING DOCUMENT IS ISSUED BY STAG ELECTRONIC DESIGNS LTD ON THE UNDERSTANDING THAT IT IS STRICTY CONFIDENTIAL AND MAY NOT BE REPRODUCED OR UTILISED IN ANY WAY WITHOUT THE PRIOR WRITTEN PERMISSION OF THE COMPANY

TITLE
PP 40 RAM I/O (1·0Mb) P.C.B.
CIRCUIT DIAGRAM

DRG No
110-0200
SHT. 2 OF 2

110-0220 SHT. 1

USED ON

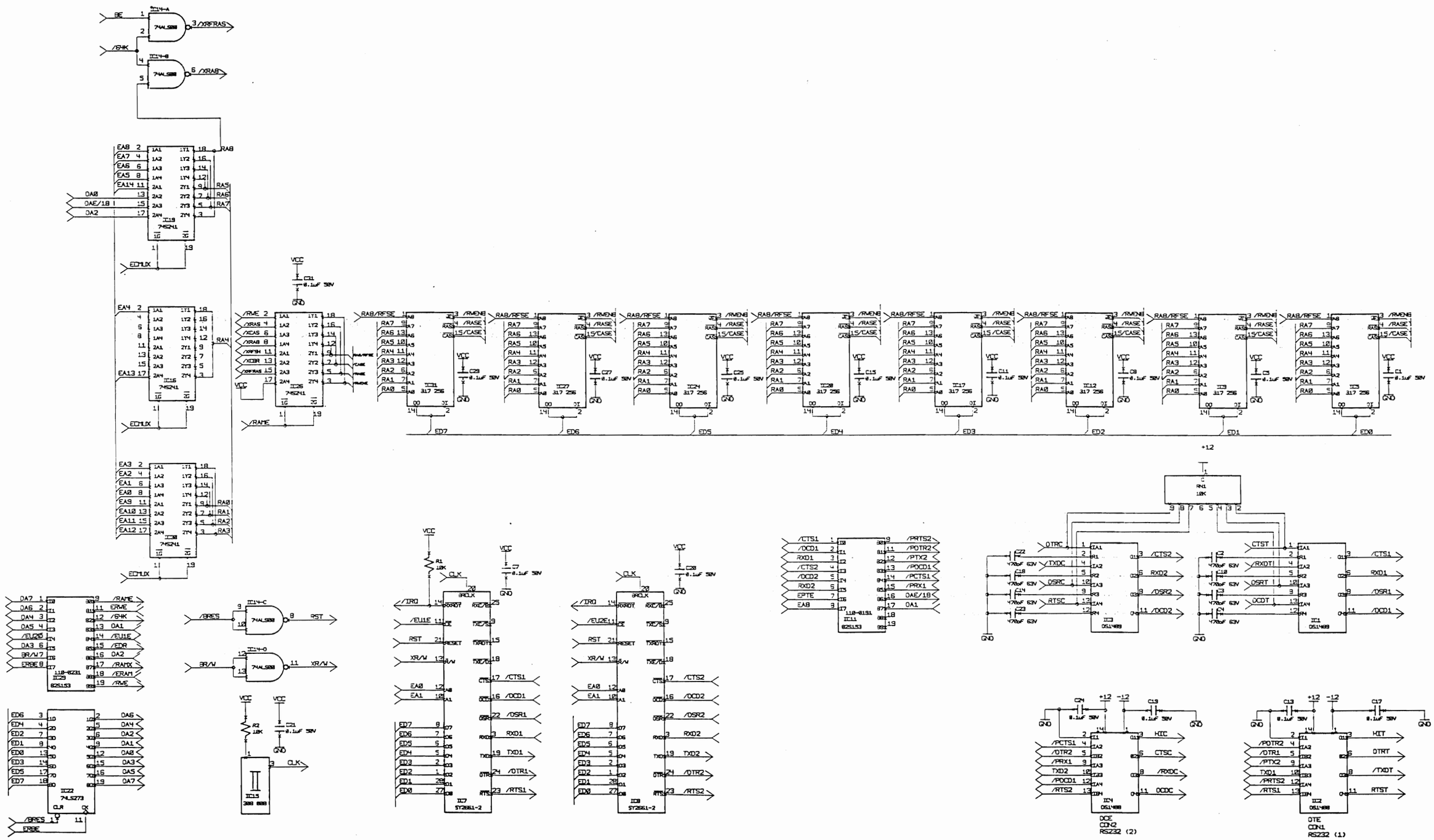

DRAWN									LIMITS UNLESS OTHERWISE STATED	DIMENSIONS IN	SCALE	stag electronic designs LTD	THIS DRAWING DOCUMENT IS ISSUED BY STAG ELECTRONIC DESIGNS LTD ON THE UNDERSTANDING THAT IT IS STRICTLY CONFIDENTIAL AND MAY NOT BE REPRODUCED OR UTILISED IN ANY WAY WITHOUT THE PRIOR WRITTEN PERMISSION OF THE COMPANY
R.W.									1 DECIMAL PLACE ±1.0mm. THREADS TO BS 1580	MATERIAL			
TRACED									2 DECIMAL PLACES ±0.4mm. DIMENSIONS APPLY				
									3 DECIMAL PLACES ±0.1mm. AFTER FINISHING.				
CHECKED									ANGLES ± 1/2° REMOVE ALL BURRS AND SHARP EDGES	FINISH	TITLE PP40 RAM I/O (2.0Mb) P.C.B. CIRCUIT DIAGRAM.		DRG No 110-0220
APPROVED	1	17·6·86	C.I.S. 849										SHT. 1 OF 2
	ISS	DATE	CHANGE No.	APP	ISS	DATE	CHANGE No.	APP					

MASTERANGE M63

110-0240 sht 1.

USED ON

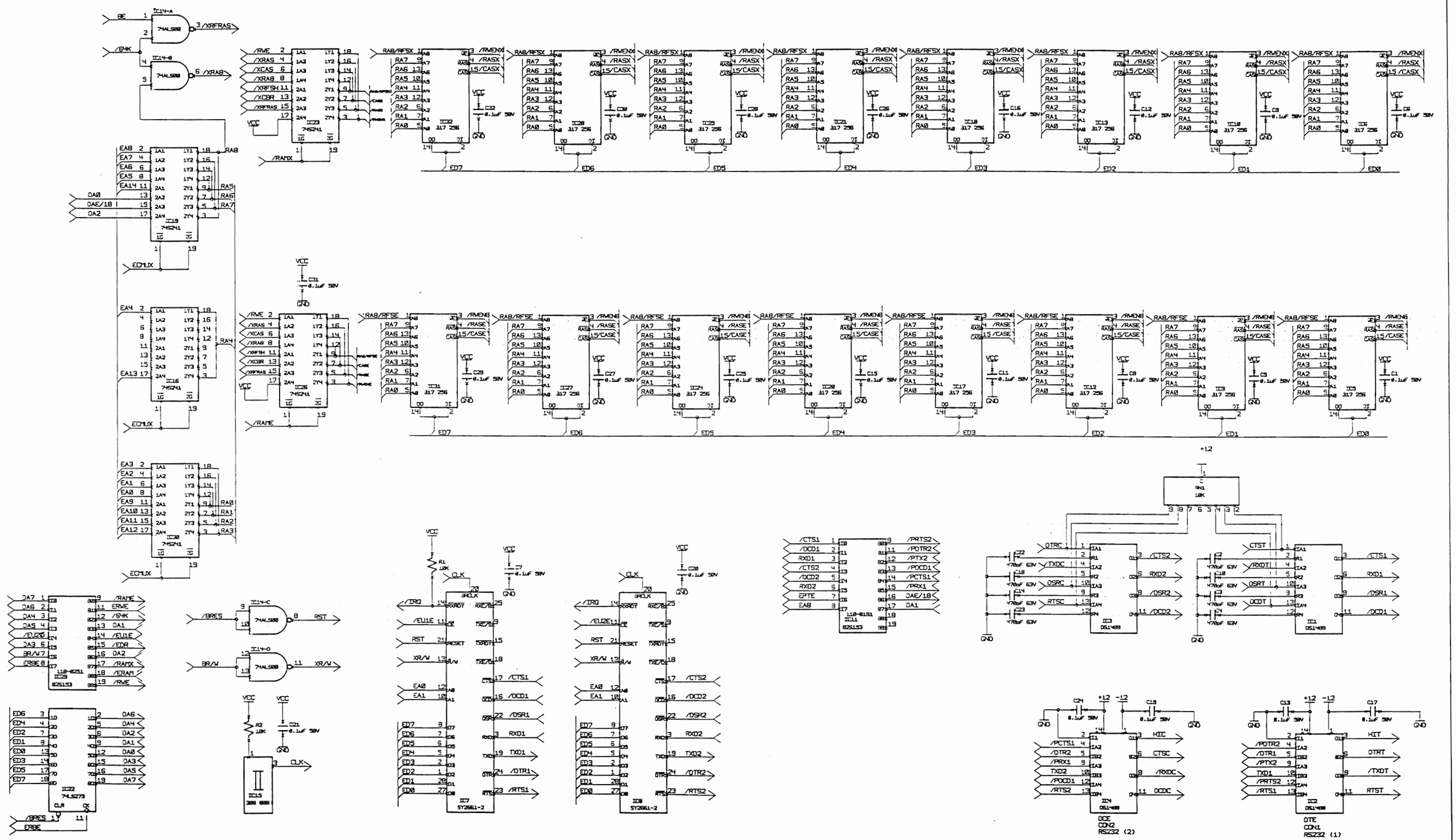

DRAWN R.W.								
TRACED								
CHECKED								
APPROVED	1	17.6.86	C.I.S. 849					
	ISS	DATE	CHANGE No.	APP	ISS	DATE	CHANGE No.	APP

MASTERANGE M63

LIMITS UNLESS OTHERWISE STATED

1 DECIMAL PLACE ±1.0mm.
2 DECIMAL PLACES ±0.4mm.
3 DECIMAL PLACES ±0.1mm.
ANGLES ± 1/2°

THREADS TO BS 1580
DIMENSIONS APPLY AFTER FINISHING.
REMOVE ALL BURRS AND SHARP EDGES

DIMENSIONS IN

SCALE

MATERIAL

FINISH

stag electronic designs LTD

TITLE

PP40 RAM I/O (4·0Mb) P.C.B. CIRCUIT DIAGRAM.

THIS DRAWING DOCUMENT IS ISSUED BY STAG ELECTRONIC DESIGNS LTD ON THE UNDERSTANDING THAT IT IS STRICTLY CONFIDENTIAL AND MAY NOT BE REPRODUCED OR UTILISED IN ANY WAY WITHOUT THE PRIOR WRITTEN PERMISSION OF THE COMPANY

DRG No

110-0240

SHT. 1 OF 2

SHT 2 OF 2

USED ON

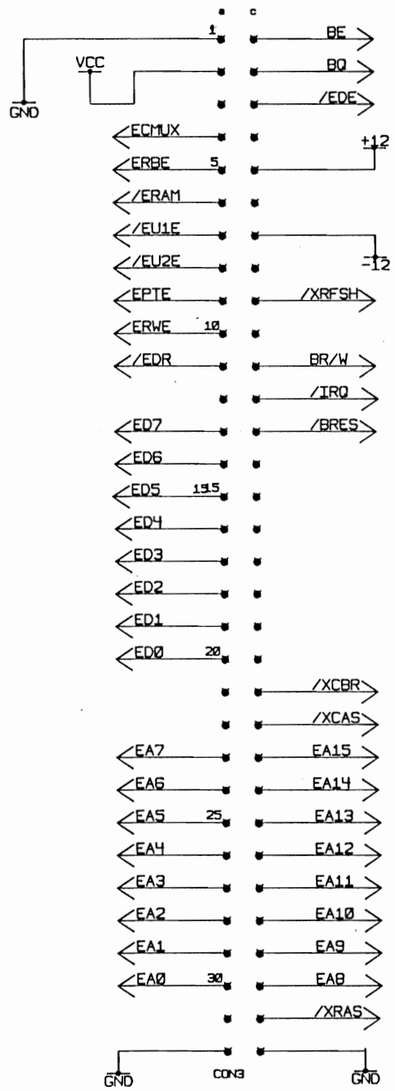

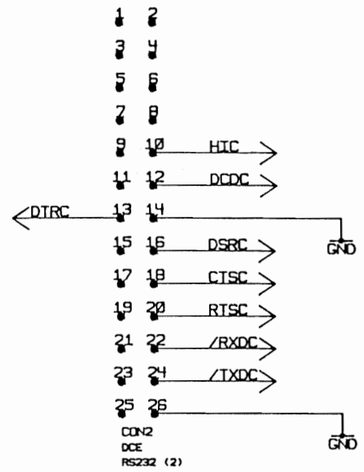

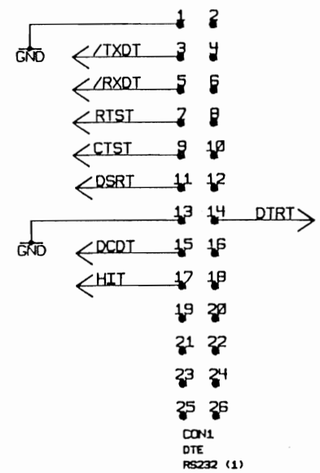

DRAWN RW				
TRACED				
CHECKED	2	14·7·86	C.I.S. 860	
APPROVED	1	17·6·86	C.I.S. 849	
	ISS	DATE	CHANGE No	APP

MASTERANGE M69

LIMITS UNLESS OTHERWISE STATED
1 DECIMAL PLACE ± 1.0mm.
2 DECIMAL PLACES ± 0.4mm.
3 DECIMAL PLACES ± 0.1mm.
ANGLES ± ½°
THREADS TO BS 1580
DIMENSIONS APPLY AFTER FINISHING.
REMOVE ALL BURRS AND SHARP EDGES

DIMENSIONS IN ____ SCALE ____
MATERIAL ____
FINISH ____

stag electronic designs LTD

THIS DRAWING DOCUMENT IS ISSUED BY STAG ELECTRONIC DESIGNS LTD ON THE UNDERSTANDING THAT IT IS STRICTY CONFIDENTIAL AND MAY NOT BE REPRODUCED OR UTILISED IN ANY WAY WITHOUT THE PRIOR WRITTEN PERMISSION OF THE COMPANY

TITLE
PP 40 RAM I/O (4·0Mb) P.C.B.
CIRCUIT DIAGRAM

DRG No
110-0240
SHT. 2 OF 2

SHT 1 OF 2

USED ON

IF IN DOUBT - ASK!

REMOVE ALL BURRS AND SHARP EDGES

THIRD ANGLE PROJECTION

ISS	CHANGES (DETAILS ONLY)

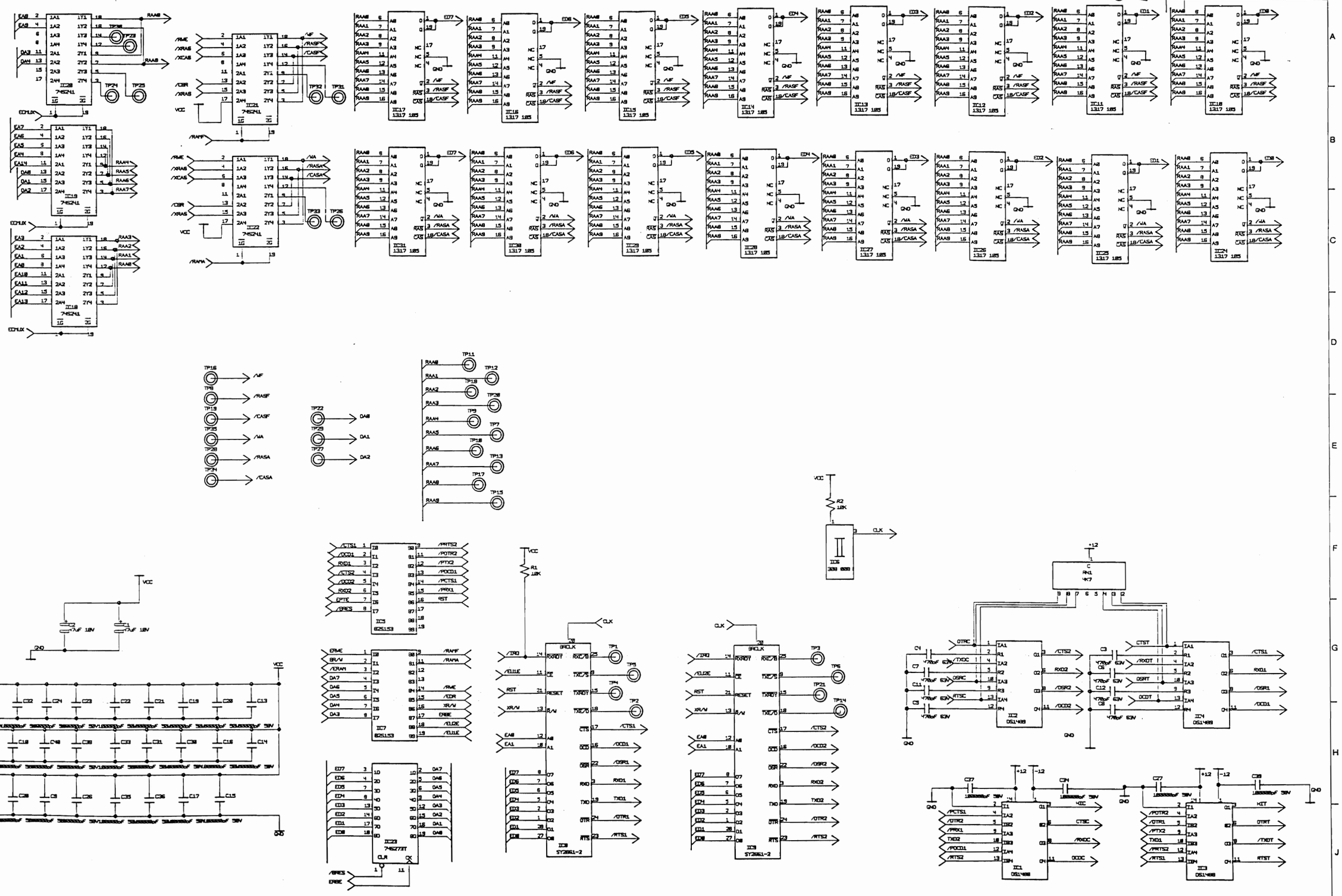

DRAWN												
H.M.G.												
CHECKED												
ENGINEERING												
APPROVED	A	29-5-87	C.I.S. 1047									
	ISS	DATE	CHANGE No	APP	ISS	DATE	CHANGE No	APP	ISS	DATE	CHANGE No	APP

LIMITS UNLESS OTHERWISE STATED

1 DECIMAL PLACE ± 0.4mm
2 DECIMAL PLACES ± 0.25mm
3 DECIMAL PLACES ± 0.15mm

THREADS TO BS 1580
DIMENSIONS APPLY AFTER FINISHING

DIMENSIONS IN

SCALE

MATERIAL

FINISH

stag electronic designs ltd

TITLE

PP40 RAM (8-16Mbit) P.C.B. ASSY. CIRCUIT DIAGRAM

THIS DRAWING DOCUMENT IS ISSUED BY STAG ELECTRONIC DESIGNS LTD ON THE UNDERSTANDING THAT IT IS STRICTLY CONFIDENTIAL AND MAY NOT BE REPRODUCED OR UTILISED IN ANY WAY WITHOUT THE PRIOR WRITTEN PERMISSION OF THE COMPANY.

DRG. No.

110-0260

SHT. 1 OF 2

USED ON

IF IN DOUBT - ASK!

REMOVE ALL BURRS AND SHARP EDGES

THIRD ANGLE PROJECTION

ISS	CHANGES (DETAILS ONLY)

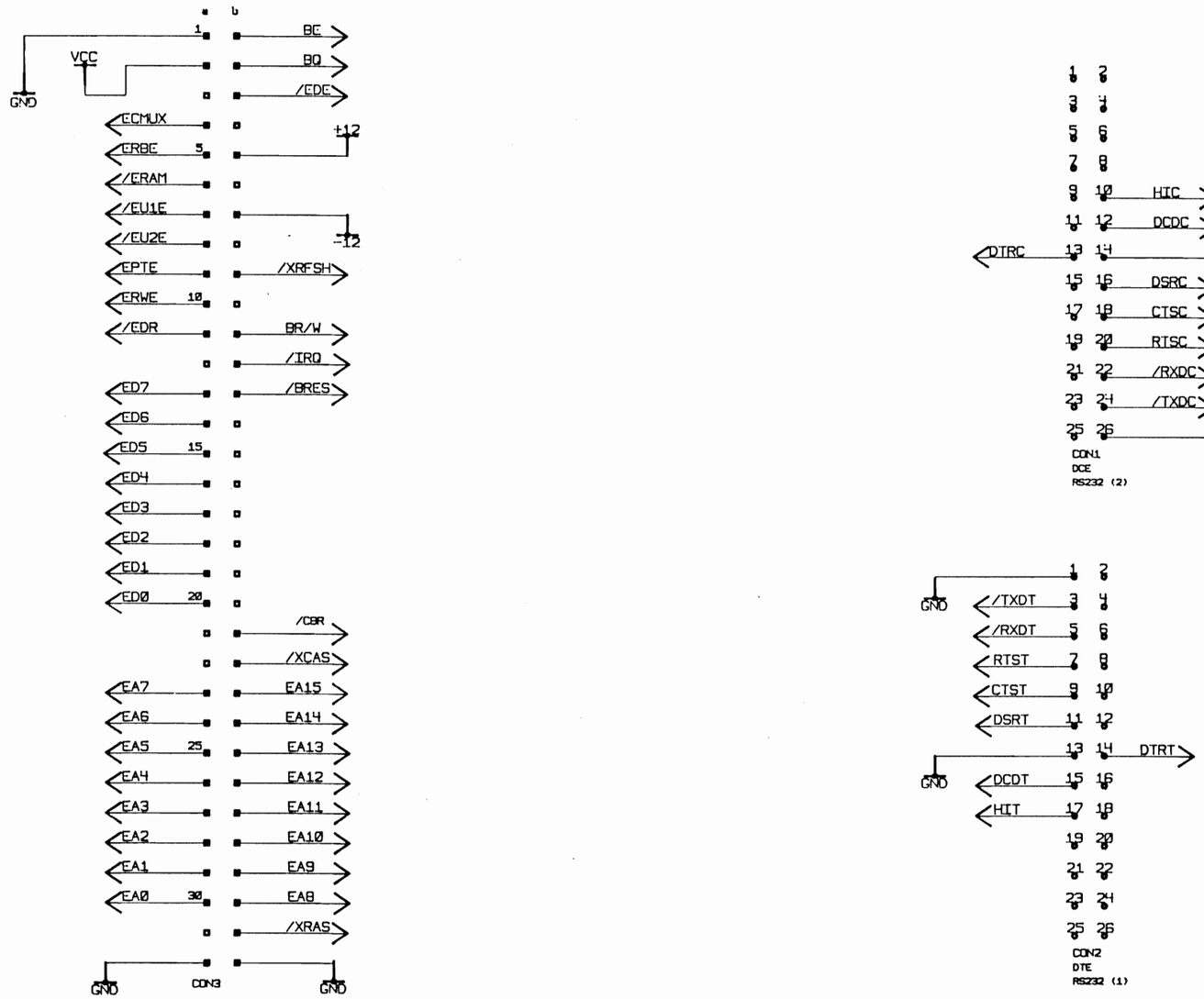

DRAWN H.M.G.									
CHECKED									
ENGINEERING									
APPROVED	A	29·5·87	C.I.S. 1047						
	ISS	DATE	CHANGE No	APP	ISS	DATE	CHANGE No	APP	

LIMITS UNLESS OTHERWISE STATED
1 DECIMAL PLACE ± 0.4mm
2 DECIMAL PLACES ± 0.25mm
3 DECIMAL PLACES ± 0.15mm
ANGLES ± ½°

THREADS TO BS 1580
DIMENSIONS APPLY AFTER FINISHING

DIMENSIONS IN | SCALE

MATERIAL

FINISH

stag electronic designs ltd

TITLE

PP40 RAM (8-16Mb) P.C.B. ASSY. CIRCUIT DIAGRAM.

THIS DRAWING DOCUMENT IS ISSUED BY STAG ELECTRONIC DESIGNS LTD ON THE UNDERSTANDING THAT IT IS STRICTLY CONFIDENTIAL AND MAY NOT BE REPRODUCED OR UTILISED IN ANY WAY WITHOUT THE PRIOR WRITTEN PERMISSION OF THE COMPANY.

DRG. No.
110-0260
SHT. 2 OF 2

SHT 1 OF 2

USED ON

IF IN DOUBT - ASK!

REMOVE ALL BURRS AND SHARP EDGES

THIRD ANGLE PROJECTION

ISS	CHANGES (DETAILS ONLY)

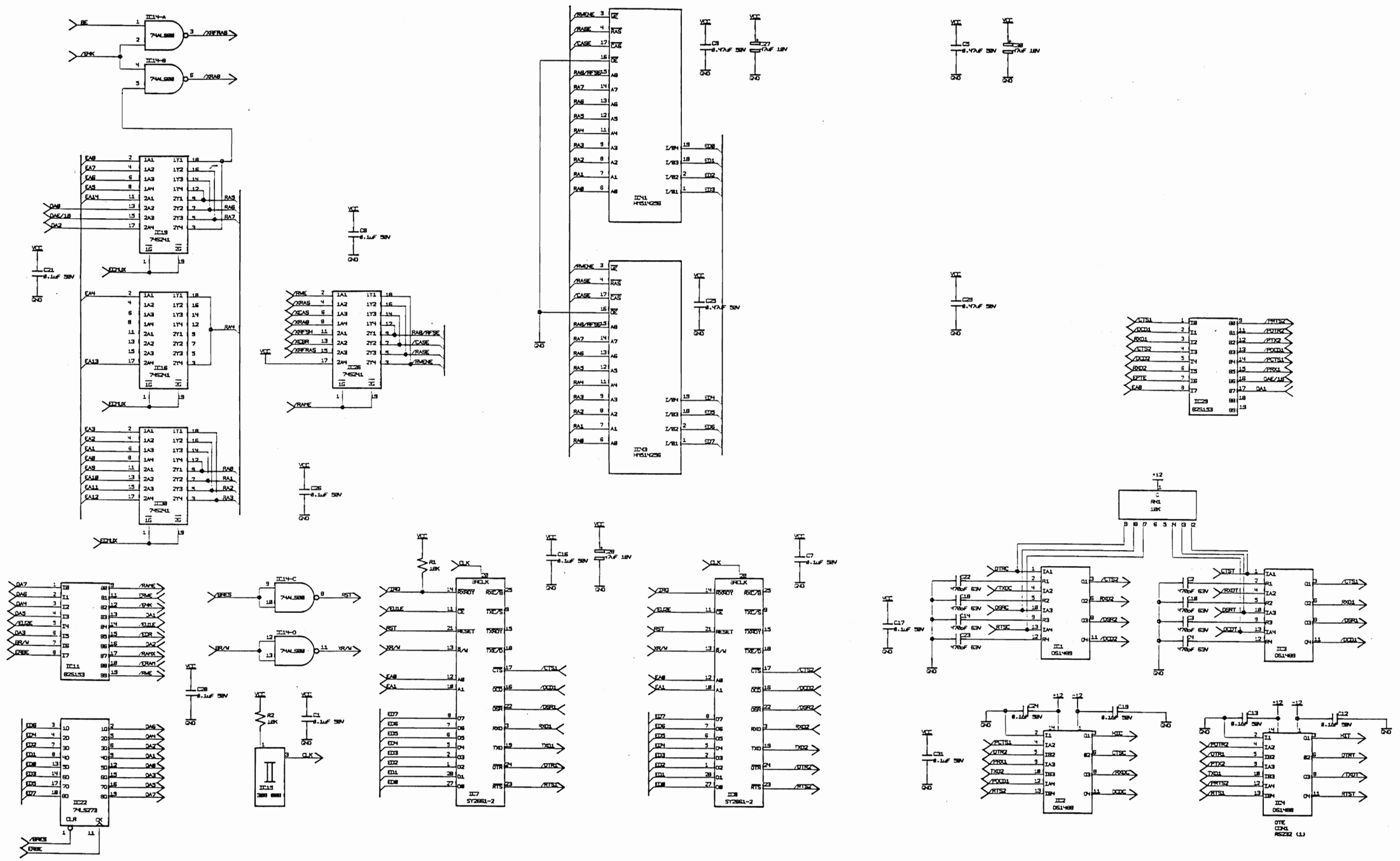

DRAWN												
H.M.G.												
CHECKED												
ENGINEERING	2	4·4·89	C.I.S. 1406									
APPROVED	1	24·11·88	C.I.S. 1341									
	ISS	DATE	CHANGE No	APP	ISS	DATE	CHANGE No	APP	ISS	DATE	CHANGE No	APP

LIMITS UNLESS OTHERWISE STATED
1 DECIMAL PLACE ± 0.4mm
2 DECIMAL PLACES ± 0.25mm
3 DECIMAL PLACES ± 0.15mm

THREADS TO BS 1580
DIMENSIONS APPLY AFTER FINISHING

DIMENSIONS IN | SCALE

MATERIAL

FINISH

stag electronic designs LTD

TITLE
ZL33 RAM 2Mb P.C.B. ASSY. CIRCUIT DIAGRAM

THIS DRAWING DOCUMENT IS ISSUED BY STAG ELECTRONIC DESIGNS LTD ON THE UNDERSTANDING THAT IT IS STRICTLY CONFIDENTIAL AND MAY NOT BE REPRODUCED OR UTILISED IN ANY WAY WITHOUT THE PRIOR WRITTEN PERMISSION OF THE COMPANY.

DRG. No.
110-0310
SHT. 1 OF 2

SHT 2 OF 2

USED ON

IF IN DOUBT - ASK!

REMOVE ALL BURRS AND SHARP EDGES

THIRD ANGLE PROJECTION

ISS	CHANGES (DETAILS ONLY)

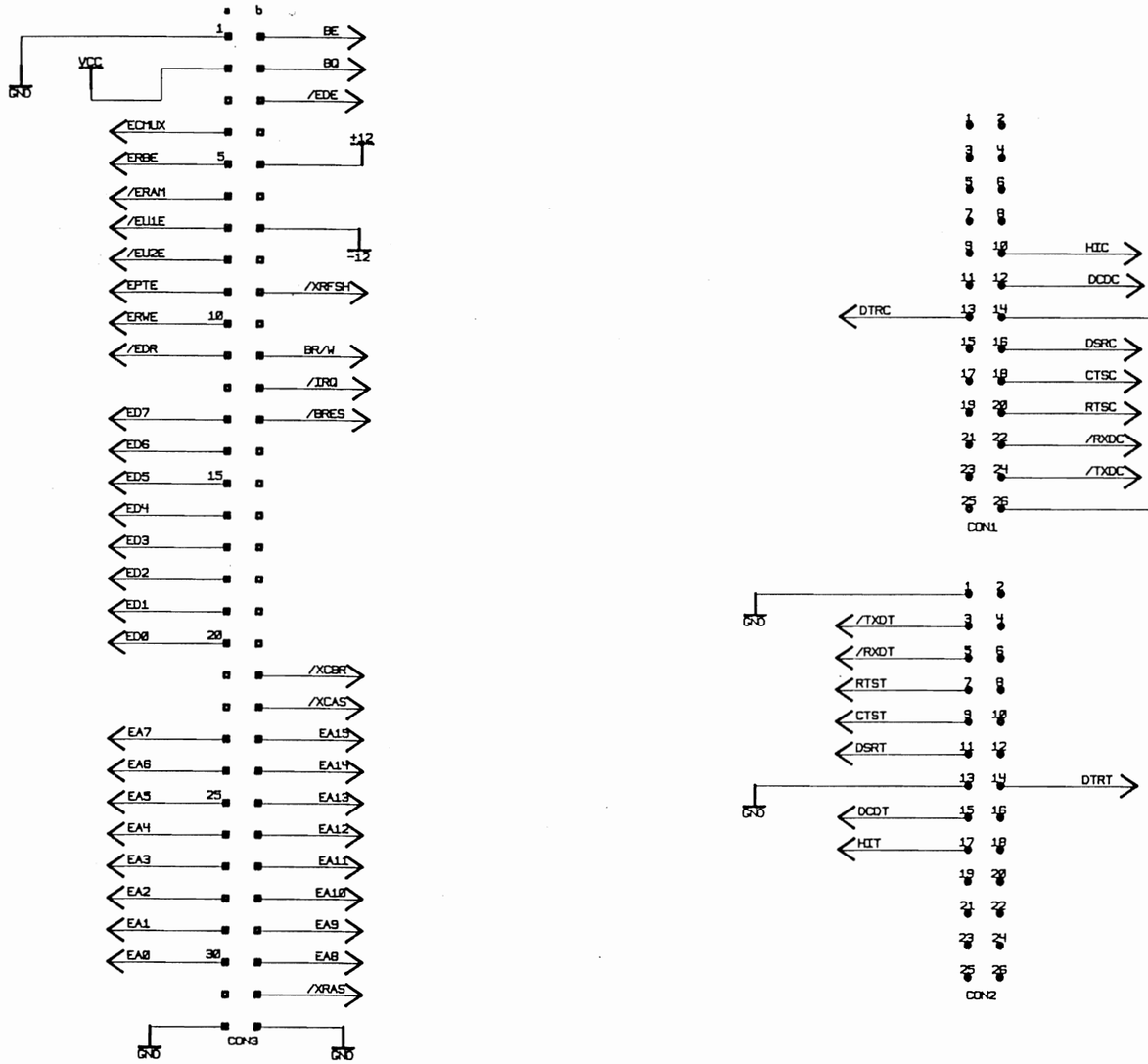

DRAWN H.M.G.								
CHECKED								
ENGINEERING	2	4·4·89	C.I.S 1406					
APPROVED	1	24·11·88	C.I.S. 1341					
	ISS	DATE	CHANGE No	APP	ISS	DATE	CHANGE No	APP

LIMITS UNLESS OTHERWISE STATED
1 DECIMAL PLACE ± 0.4mm
2 DECIMAL PLACES ± 0.25mm
3 DECIMAL PLACES ± 0.15mm
ANGLES ± ½°

THREADS TO BS 1580
DIMENSIONS APPLY AFTER FINISHING

DIMENSIONS IN | SCALE

MATERIAL

FINISH

stag ELECTRONIC DESIGNS LTD

THIS DRAWING DOCUMENT IS ISSUED BY STAG ELECTRONIC DESIGNS LTD ON THE UNDERSTANDING THAT IT IS STRICTLY CONFIDENTIAL AND MAY NOT BE REPRODUCED OR UTILISED IN ANY WAY WITHOUT THE PRIOR WRITTEN PERMISSION OF THE COMPANY.

TITLE
ZL33 RAM 2Mb P.C.B. ASSY.
CIRCUIT DIAGRAM

DRG. No.
110-0310
SHT. 2 OF 2

0645-188T

USED ON

IF IN DOUBT - ASK!

REMOVE ALL BURRS AND SHARP EDGES

THIRD ANGLE PROJECTION

ISS	CHANGES (DETAILS ONLY)

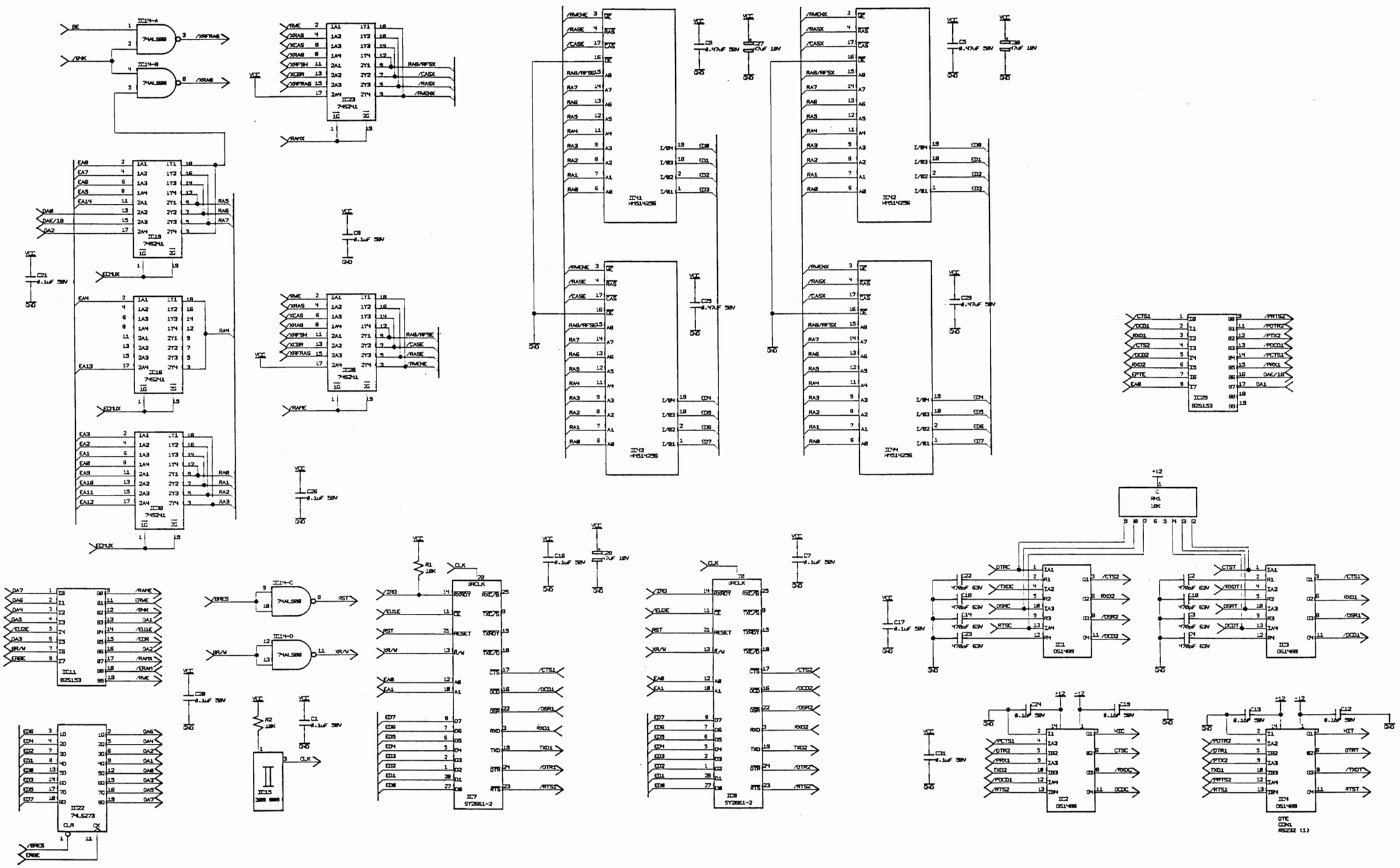

DRAWN												
H.M.G.												
CKED												
ENGINEERING	2	4·4·89	C.I.S 1406									
APPROVED	1	24·11·88	C.I.S. 1341									
	ISS	DATE	CHANGE No	APP	ISS	DATE	CHANGE No	APP	ISS	DATE	CHANGE No	APP

LIMITS UNLESS OTHERWISE STATED

1 DECIMAL PLACE ± 0.4mm
2 DECIMAL PLACES ± 0.25mm
3 DECIMAL PLACES ± 0.15mm

THREADS TO BS 1580
DIMENSIONS APPLY AFTER FINISHING

DIMENSIONS IN | SCALE

MATERIAL

FINISH

stag electronic designs LTD

TITLE

ZL33 RAM 4Mb P.C.B. ASSY. CIRCUIT DIAGRAM

THIS DRAWING DOCUMENT IS ISSUED BY STAG ELECTRONIC DESIGNS LTD ON THE UNDERSTANDING THAT IT IS STRICTLY CONFIDENTIAL AND MAY NOT BE REPRODUCED OR UTILISED IN ANY WAY WITHOUT THE PRIOR WRITTEN PERMISSION OF THE COMPANY.

DRG. No.

110-0320

SHT. 1 OF 2

USED ON 110-0331

IF IN DOUBT - ASK!

REMOVE ALL BURRS AND SHARP EDGES

THIRD ANGLE PROJECTION

ISS	CHANGES (DETAILS ONLY)

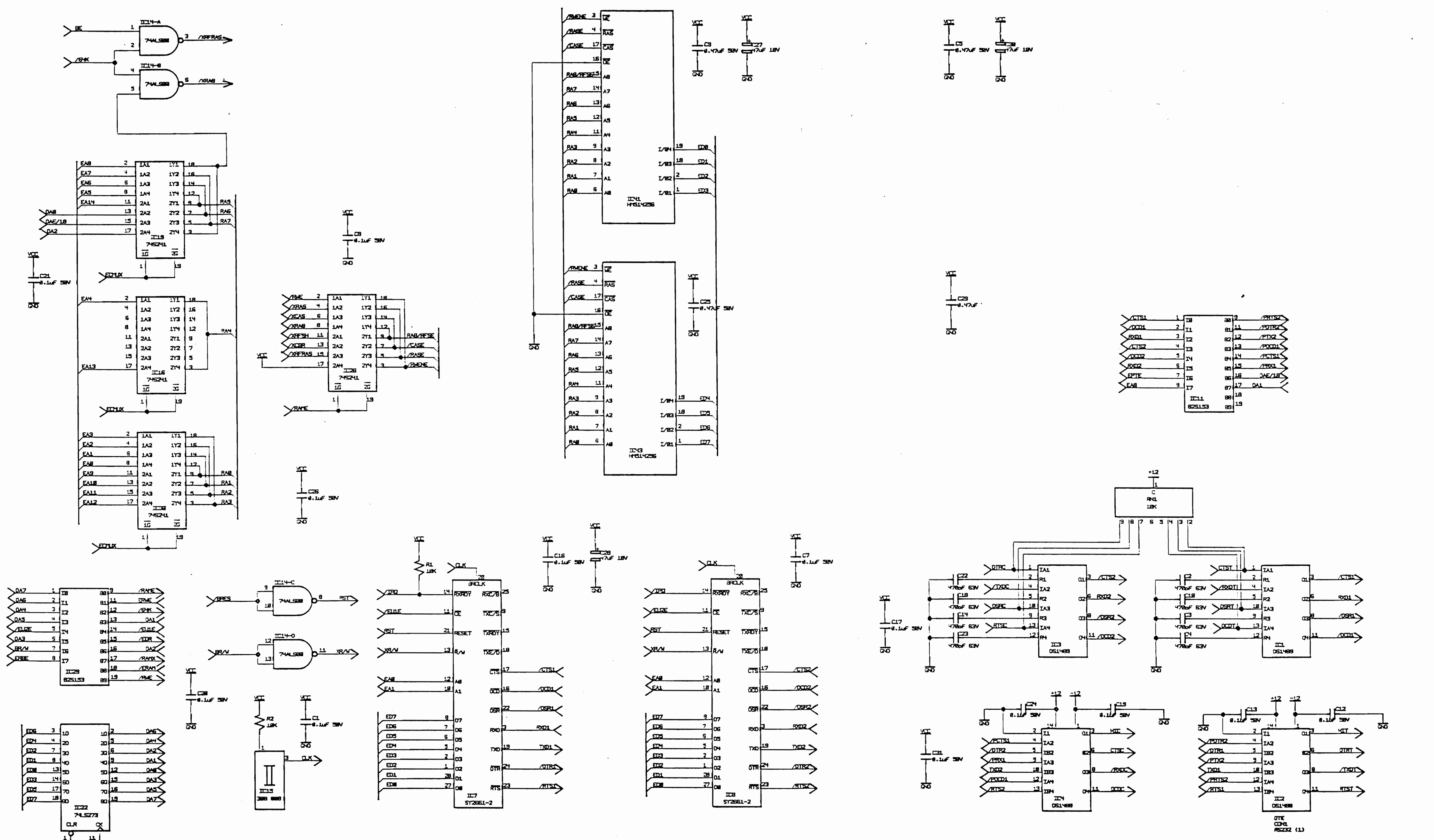

DRAWN C.J.D.												
CHECKED												
ENGINEERING												
	1	4·4·89	CIS 1406									
APPROVED	ISS	DATE	CHANGE No	APP	ISS	DATE	CHANGE No	APP	ISS	DATE	CHANGE No	APP

LIMITS UNLESS OTHERWISE STATED
1 DECIMAL PLACE ± 0.4mm
2 DECIMAL PLACES ± 0.25mm
3 DECIMAL PLACES ± 0.15mm

THREADS TO BS 1580
DIMENSIONS APPLY AFTER FINISHING

DIMENSIONS IN | SCALE

MATERIAL

FINISH

stag electronic designs LTD

THIS DRAWING DOCUMENT IS ISSUED BY STAG ELECTRONIC DESIGNS LTD ON THE UNDERSTANDING THAT IT IS STRICTLY CONFIDENTIAL AND MAY NOT BE REPRODUCED OR UTILISED IN ANY WAY WITHOUT THE PRIOR WRITTEN PERMISSION OF THE COMPANY.

TITLE
PP40 2Mb RAM P.C.B. CIRCUIT DIAGRAM.

DRG. No.
110-0330

SHT. 1 OF 2.

USED ON 110-0341

IF IN DOUBT - ASK!

REMOVE ALL BURRS AND SHARP EDGES

THIRD ANGLE PROJECTION

ISS	CHANGES (DETAILS ONLY)

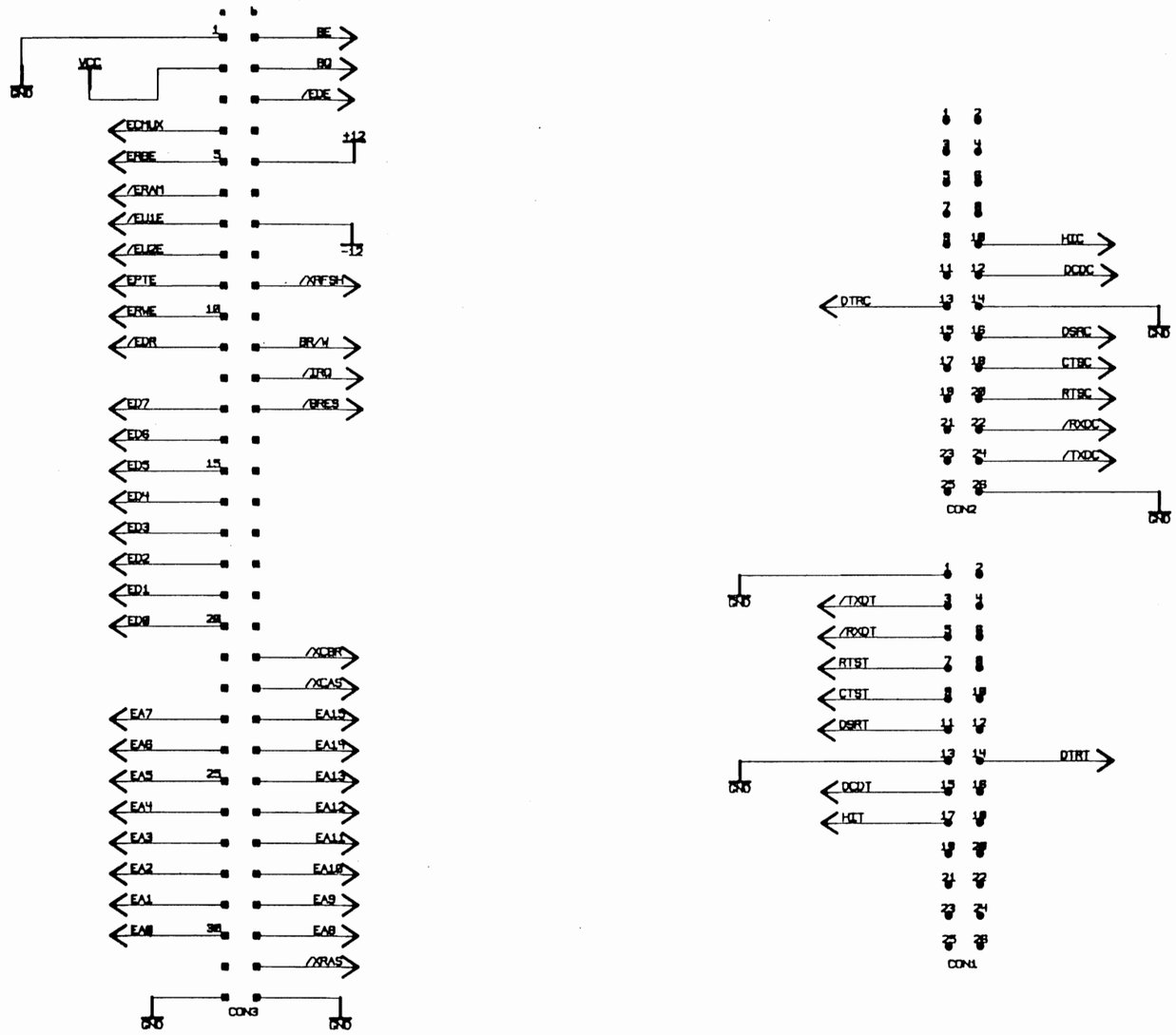

DRAWN C.J.D.								
CHECKED								
ENGINEERING								
APPROVED	1	4·4·89	CIS 1406					
	ISS	DATE	CHANGE No	APP	ISS	DATE	CHANGE No	APP

LIMITS UNLESS OTHERWISE STATED
1 DECIMAL PLACE ± 0.4mm
2 DECIMAL PLACES ± 0.25mm
3 DECIMAL PLACES ± 0.15mm
ANGLES ± ½°

THREADS TO BS 1580
DIMENSIONS APPLY AFTER FINISHING

DIMENSIONS IN

SCALE

MATERIAL

FINISH

stag ELECTRONIC DESIGNS LTD

TITLE

PP40 4Mb RAM P.C.B. CIRCUIT DIAGRAM.

THIS DRAWING DOCUMENT IS ISSUED BY STAG ELECTRONIC DESIGNS LTD ON THE UNDERSTANDING THAT IT IS STRICTLY CONFIDENTIAL AND MAY NOT BE REPRODUCED OR UTILISED IN ANY WAY WITHOUT THE PRIOR WRITTEN PERMISSION OF THE COMPANY.

DRG. No. 110-0340

SHT. 2 OF 2.

115-0140 SHT 1

USED ON

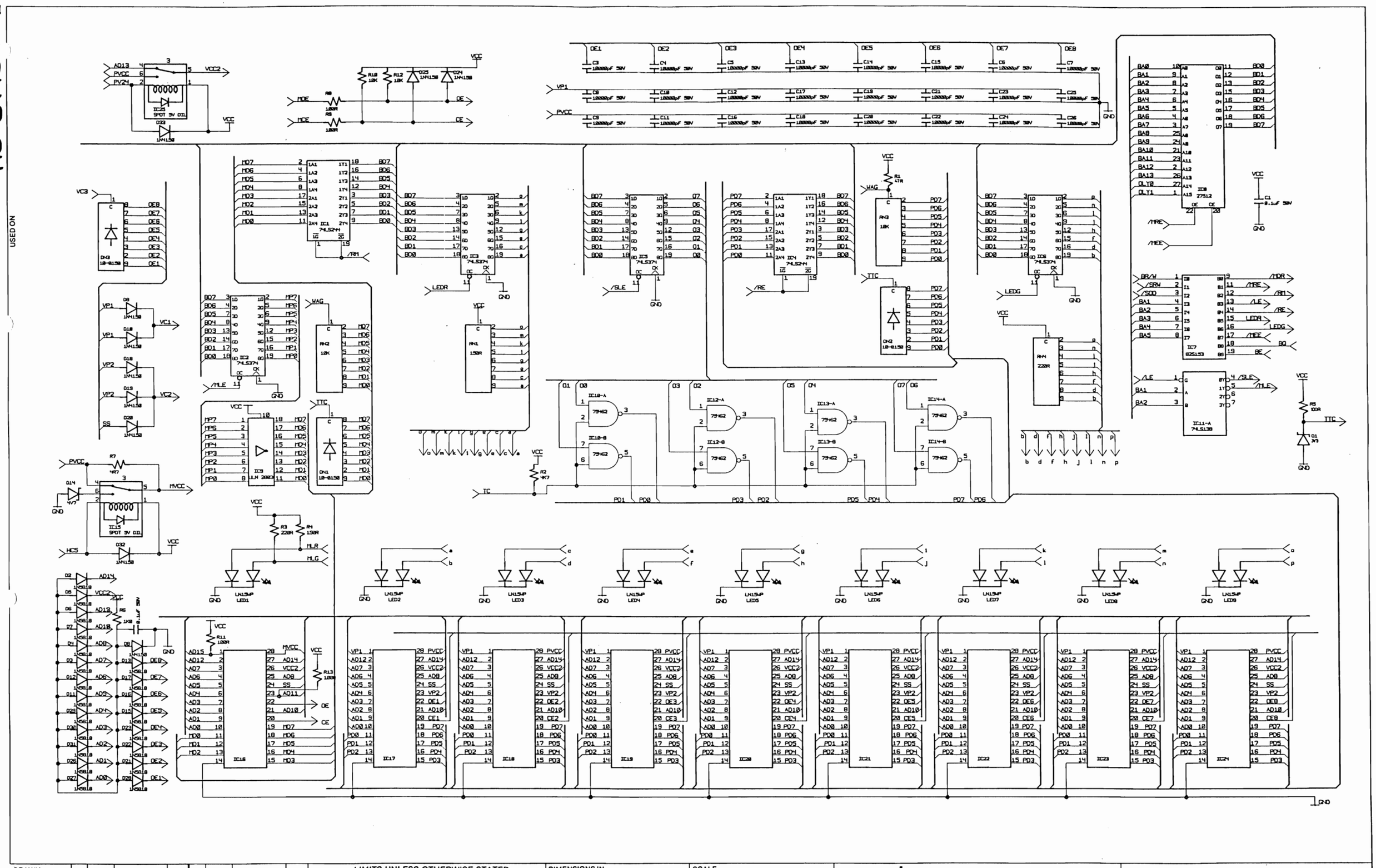

DRAWN RW								
TRACED								
CHECKED	4	14·5·87	C.I.S. 1037					
APPROVED	3	25·9·86	C.I.S. 905					
	ISS	DATE	CHANGE No.	APP	ISS	DATE	CHANGE No.	APP

LIMITS UNLESS OTHERWISE STATED

1 DECIMAL PLACE ±1.0mm.
2 DECIMAL PLACES ±0.4mm.
3 DECIMAL PLACES ±0.1mm.
ANGLES ± 1/2°

THREADS TO BS 1580
DIMENSIONS APPLY AFTER FINISHING.
REMOVE ALL BURRS AND SHARP EDGES

DIMENSIONS IN _____ SCALE _____

MATERIAL _____

FINISH _____

stag ELECTRONIC DESIGNS LTD

TITLE
PROM MODULE
(40M100/41M100)' P.C.B.
CIRCUIT DIAGRAM

THIS DRAWING DOCUMENT IS ISSUED BY STAG ELECTRONIC DESIGNS LTD ON THE UNDERSTANDING THAT IT IS STRICTLY CONFIDENTIAL AND MAY NOT BE REPRODUCED OR UTILISED IN ANY WAY WITHOUT THE PRIOR WRITTEN PERMISSION OF THE COMPANY

DRG No 115-0140

SHT 1 OF 2

MASTERANGE M63

115-0140

USED ON

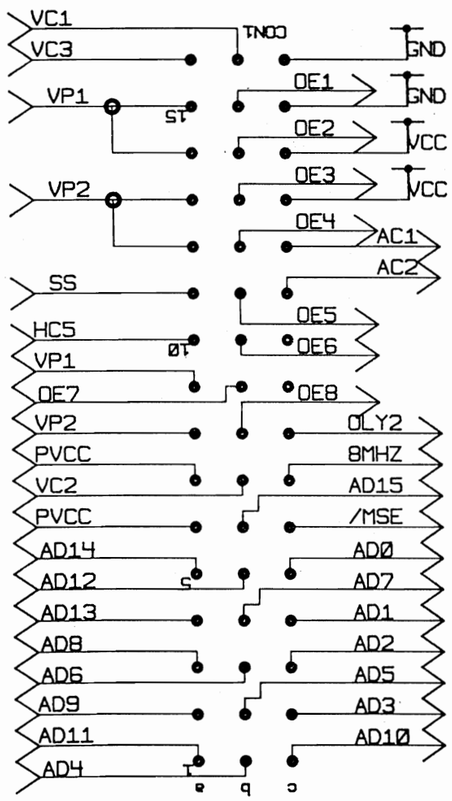

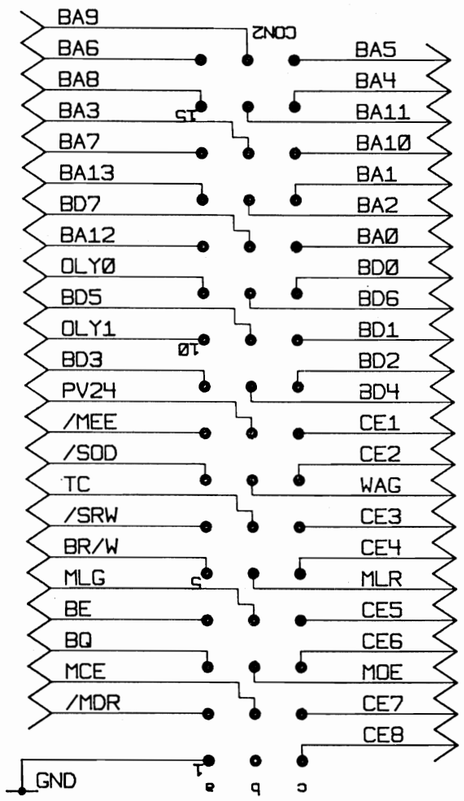

DRAWN RW					
TRACED					
CHECKED					
APPROVED	3	25-9-86	C.I.S. 905		
	ISS	DATE	CHANGE No.	APP	

LIMITS UNLESS OTHERWISE STATED

1 DECIMAL PLACE ± 1.0mm.
2 DECIMAL PLACES ± 0.4mm.
3 DECIMAL PLACES ± 0.1mm.
ANGLES ± ½°

THREADS TO BS 1580
DIMENSIONS APPLY
AFTER FINISHING.
REMOVE ALL BURRS AND SHARP EDGES

DIMENSIONS IN ____ SCALE ____

MATERIAL ____

FINISH ____

stag electronic designs LTD

TITLE PROM MODULE (40M100/41M100) P.C.B. CIRCUIT DIAGRAM

THIS DRAWING DOCUMENT IS ISSUED BY STAG ELECTRONIC DESIGNS LTD. ON THE UNDERSTANDING THAT IT IS STRICTLY CONFIDENTIAL AND MAY NOT BE REPRODUCED OR UTILISED IN ANY WAY WITHOUT PRIOR WRITTEN PERMISSION OF THE COMPANY.

DRG. No. 115-0140

SHT 2 OF 2

Admel P/1/710

SHT 1 OF 2

USED ON

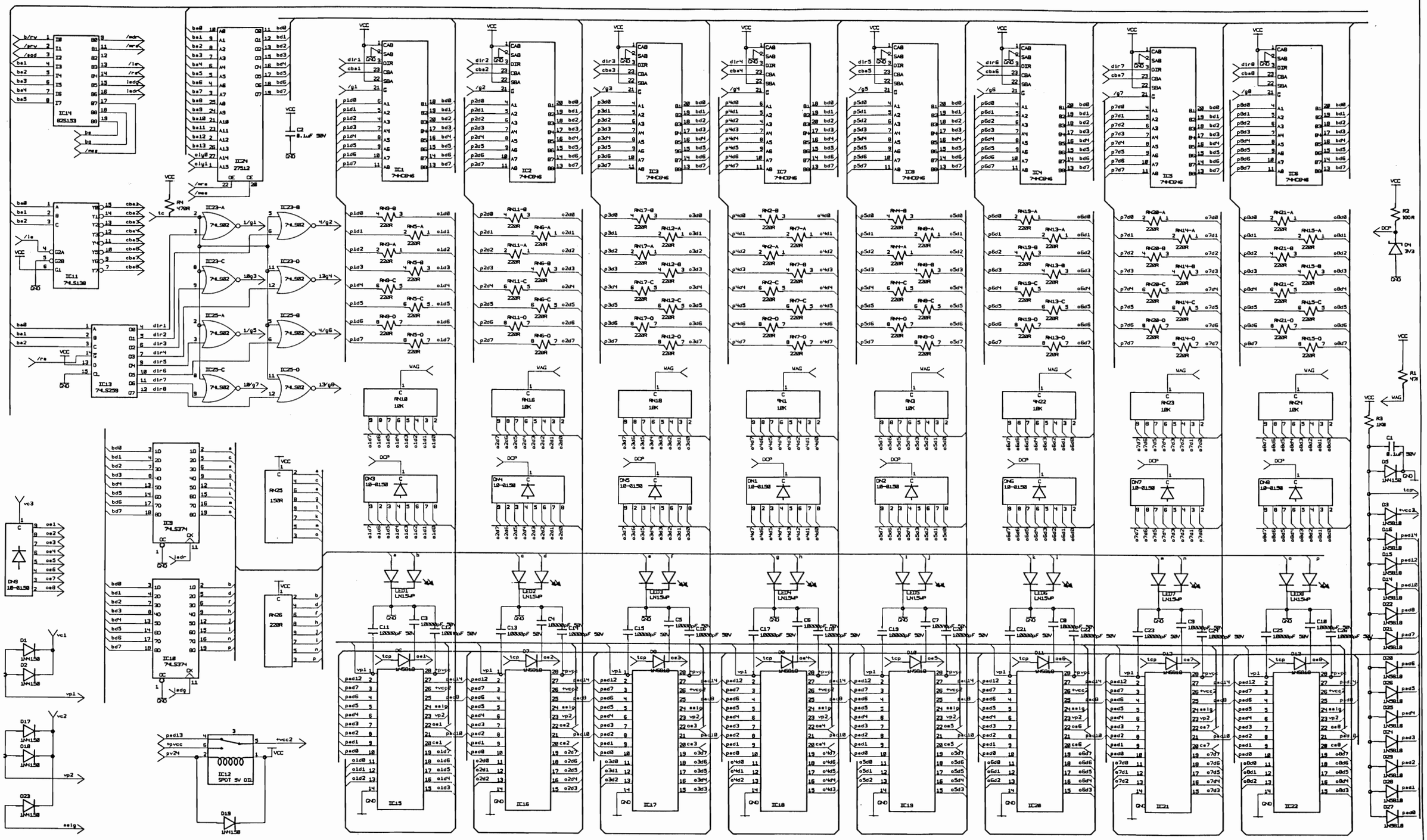

DRAWN RW								
TRACED								
CHECKED	2	14·5·87	C.I.S 1037					
APPROVED	1	14·6·86	C.I.S 861					
	ISS	DATE	CHANGE No.	APP	ISS	DATE	CHANGE No.	APP

MASTERANGE M63

LIMITS UNLESS OTHERWISE STATED

1 DECIMAL PLACE ±1.0mm.
2 DECIMAL PLACES ±0.4mm.
3 DECIMAL PLACES ±0.1mm.
ANGLES ± 1/2°

THREADS TO BS 1580
DIMENSIONS APPLY AFTER FINISHING.
REMOVE ALL BURRS AND SHARP EDGES

DIMENSIONS IN

SCALE

MATERIAL

FINISH

stag ELECTRONIC DESIGNS LTD

TITLE
PP 40 PROM MODULE (42M100)
CIRCUIT DIAGRAM

THIS DRAWING DOCUMENT IS ISSUED BY STAG ELECTRONIC DESIGNS LTD ON THE UNDERSTANDING THAT IT IS STRICTLY CONFIDENTIAL AND MAY NOT BE REPRODUCED OR UTILISED IN ANY WAY WITHOUT THE PRIOR WRITTEN PERMISSION OF THE COMPANY

DRG No
115-0200

SHT 1 OF 2

USED ON

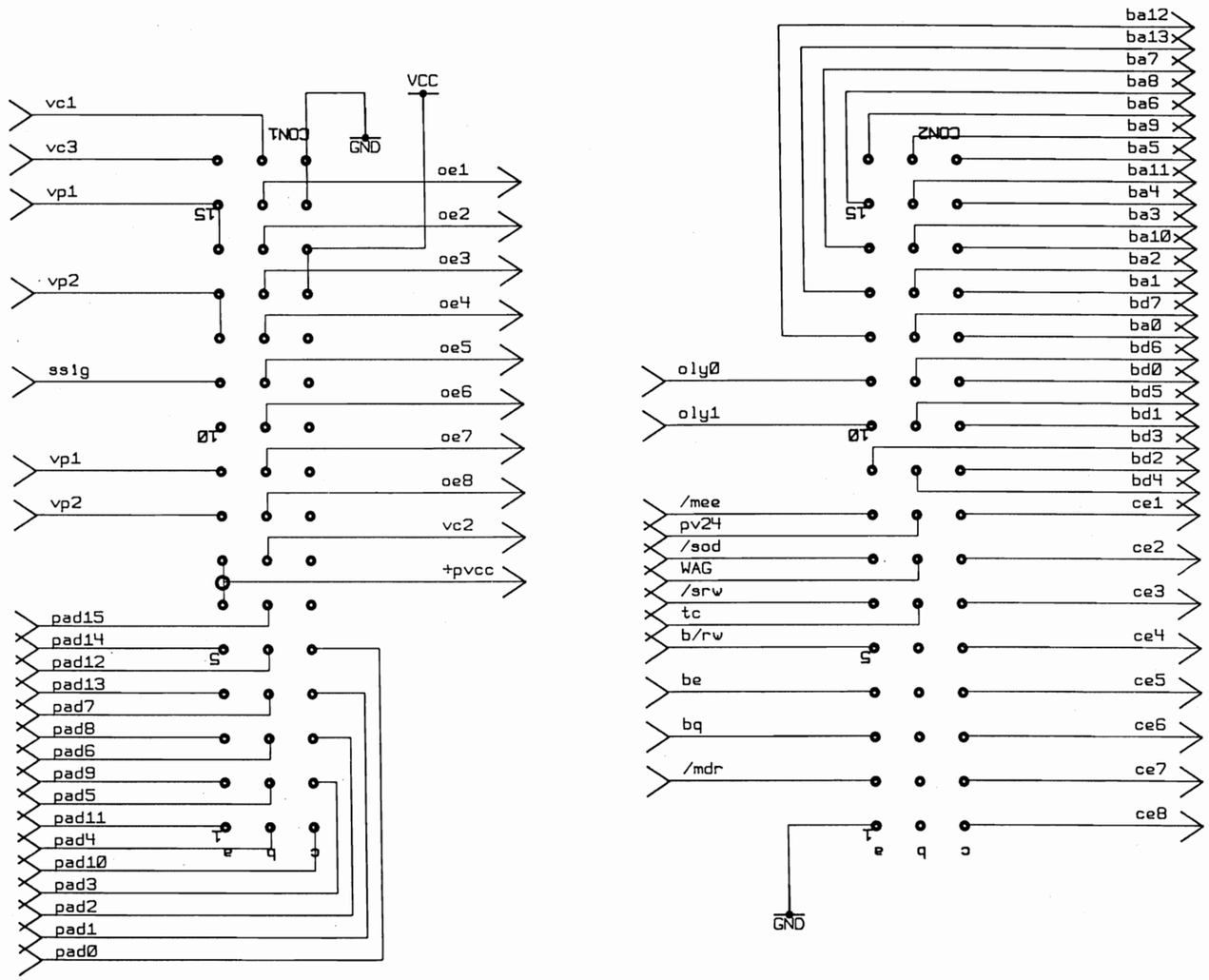

DRAWN RW					LIMITS UNLESS OTHERWISE STATED 1 DECIMAL PLACE ± 1.0mm. 2 DECIMAL PLACES ± 0.4mm. 3 DECIMAL PLACES ± 0.1mm. ANGLES ± ½° THREADS TO BS 1580 DIMENSIONS APPLY AFTER FINISHING. REMOVE ALL BURRS AND SHARP EDGES	DIMENSIONS IN ___ SCALE ___
TRACED						MATERIAL ___
CHECKED						FINISH ___
APPROVED	1	14·6·86	C.I.S. 861			
	ISS	DATE	CHANGE No.	APP		

stag electronic designs ltd

THIS DRAWING DOCUMENT IS ISSUED BY STAG ELECTRONIC DESIGNS LTD. ON THE UNDERSTANDING THAT IT IS STRICTLY CONFIDENTIAL AND MAY NOT BE REPRODUCED OR UTILISED IN ANY WAY WITHOUT PRIOR WRITTEN PERMISSION OF THE COMPANY.

TITLE
PP40 PROM MODULE
(42 M 100)
CIRCUIT DIAGRAM

DRG. No.
115-0200
SHT. 2 OF 2

Admel P/1/710

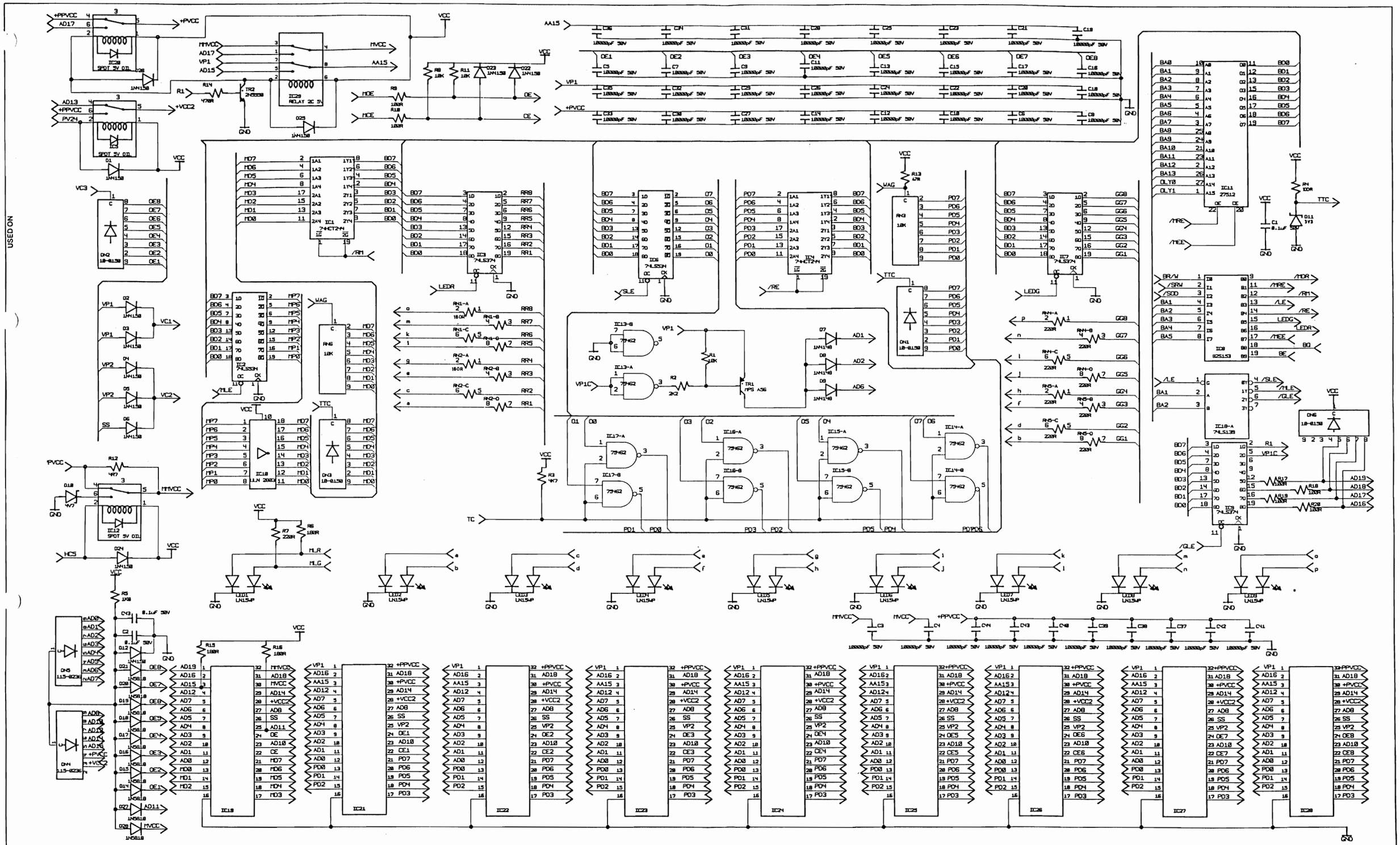

DRAWN CJD	5	14.5.87	C.I.S. 1037					
TRACED	4	18.2.87	C.I.S. 990					
	3	29.1.87	C.I.S. 975					
CHECKED	2	6.1.86	C.I.S. 964					
APPROVED	1	3.10.86	C.I.S. 913					
	ISS	DATE	CHANGE No.	APP	ISS	DATE	CHANGE No.	APP

LIMITS UNLESS OTHERWISE STATED

1 DECIMAL PLACE ±1.0mm.
2 DECIMAL PLACES ±0.4mm.
3 DECIMAL PLACES ±0.1mm.
ANGLES ± 1/2°

THREADS TO BS 1580
DIMENSIONS APPLY AFTER FINISHING.
REMOVE ALL BURRS AND SHARP EDGES

DIMENSIONS IN

SCALE

MATERIAL

FINISH

stag ELECTRONIC DESIGNS LTD

TITLE PP40 (40M101)
PCB
CIRCUIT DIAGRAM

THIS DRAWING DOCUMENT IS ISSUED BY STAG ELECTRONIC DESIGNS LTD ON THE UNDERSTANDING THAT IT IS STRICTLY CONFIDENTIAL AND MAY NOT BE REPRODUCED OR UTILISED IN ANY WAY WITHOUT THE PRIOR WRITTEN PERMISSION OF THE COMPANY

DRG No 115 - 0220

SHT 1 OF 2

MASTERANGE M63

115-0220 Sht 2

USED ON

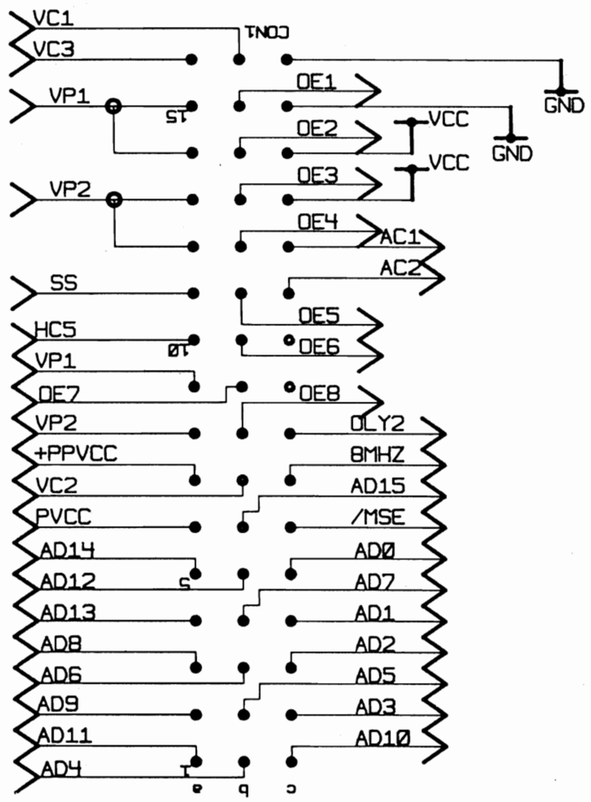

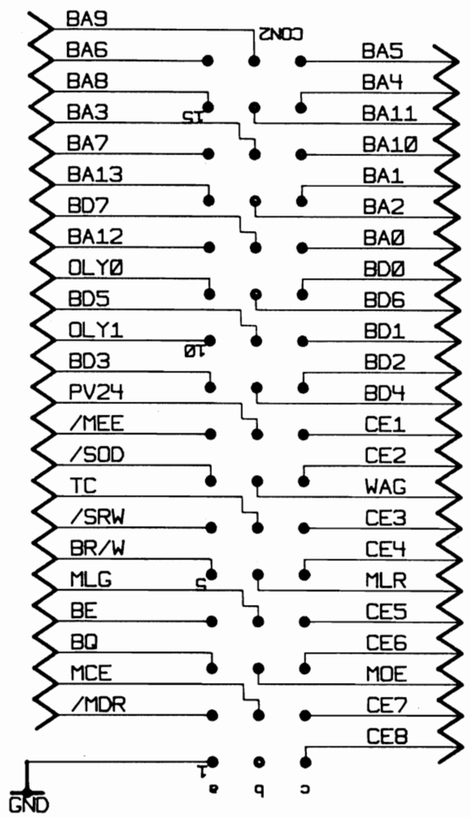

DRAWN FN					LIMITS UNLESS OTHERWISE STATED 1 DECIMAL PLACE ± 1.0mm. 2 DECIMAL PLACES ± 0.4mm. 3 DECIMAL PLACES ± 0.1mm. ANGLES ± ½° THREADS TO BS 1580 DIMENSIONS APPLY AFTER FINISHING. REMOVE ALL BURRS AND SHARP EDGES
TRACED					
CHECKED					
APPROVED	1	3-10-86	C.I.S. 913		
	ISS	DATE	CHANGE No.	APP	

DIMENSIONS IN ____	SCALE ____
MATERIAL ____	
FINISH ____	

stag electronic designs ltd

TITLE
PP40 (40M101)
P.C.B.
CIRCUIT DIAGRAM

THIS DRAWING DOCUMENT IS ISSUED BY STAG ELECTRONIC DESIGNS LTD. ON THE UNDERSTANDING THAT IT IS STRICTLY CONFIDENTIAL AND MAY NOT BE REPRODUCED OR UTILISED IN ANY WAY WITHOUT PRIOR WRITTEN PERMISSION OF THE COMPANY.

DRG. No. 115-0220

SHT 2 OF 2

Admel P/1/710

USED ON
115-0271

IF IN DOUBT - ASK!

REMOVE ALL BURRS AND SHARP EDGES

THIRD ANGLE PROJECTION

ISS	CHANGES (DETAILS ONLY)

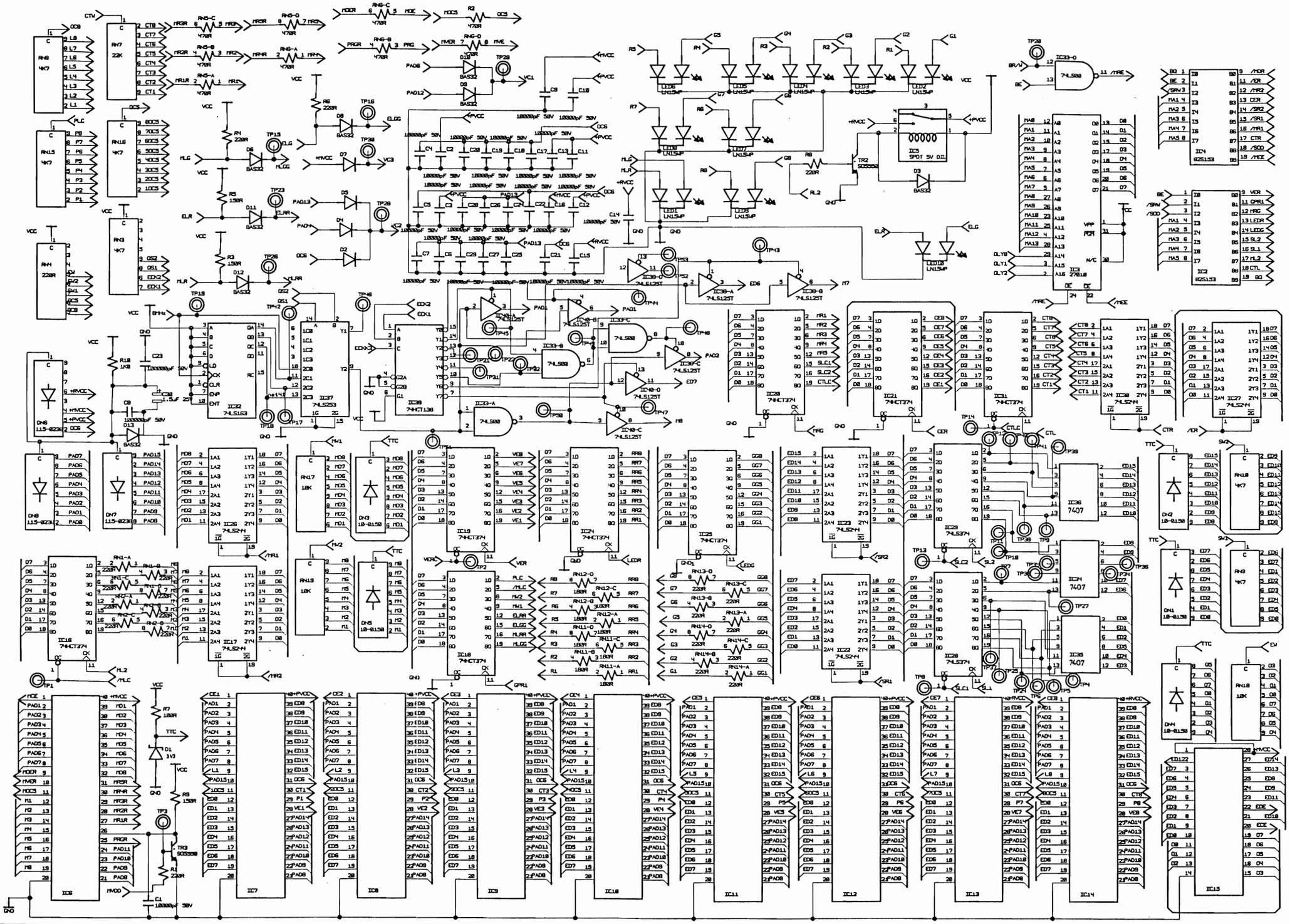

DRAWN R.W.	5	4·12·87	C.I.S. 1196										
CHECKED	4	17·8·87	CIS 1136										
	3	25·3·87	CIS 1010										
ENGINEERING	2	25·9·87	CIS 910										
APPROVED	1	16·9·86	CIS 902										
	ISS	DATE	CHANGE No	APP	ISS	DATE	CHANGE No	APP	ISS	DATE	CHANGE No	APP	

LIMITS UNLESS OTHERWISE STATED
1 DECIMAL PLACE ± 0.4mm
2 DECIMAL PLACES ± 0.25mm
3 DECIMAL PLACES ± 0.15mm

THREADS TO BS 1580
DIMENSIONS APPLY AFTER FINISHING

DIMENSIONS IN
SCALE
MATERIAL
FINISH

stag electronic designs LTD

TITLE
MICRO MODULE 41M200 PCB CIRCUIT DIAGRAM.

THIS DRAWING DOCUMENT IS ISSUED BY STAG ELECTRONIC DESIGNS LTD ON THE UNDERSTANDING THAT IT IS STRICTLY CONFIDENTIAL AND MAY NOT BE REPRODUCED OR UTILISED IN ANY WAY WITHOUT THE PRIOR WRITTEN PERMISSION OF THE COMPANY.

DRG. No.
115-0270
SHT. 1 OF 2

SHT 2 OF 2

USED ON 115-0271

IF IN DOUBT - ASK!

REMOVE ALL BURRS & SHARP EDGES

THIRD ANGLE PROJECTION

ISS	CHANGES (DETAILS ONLY)

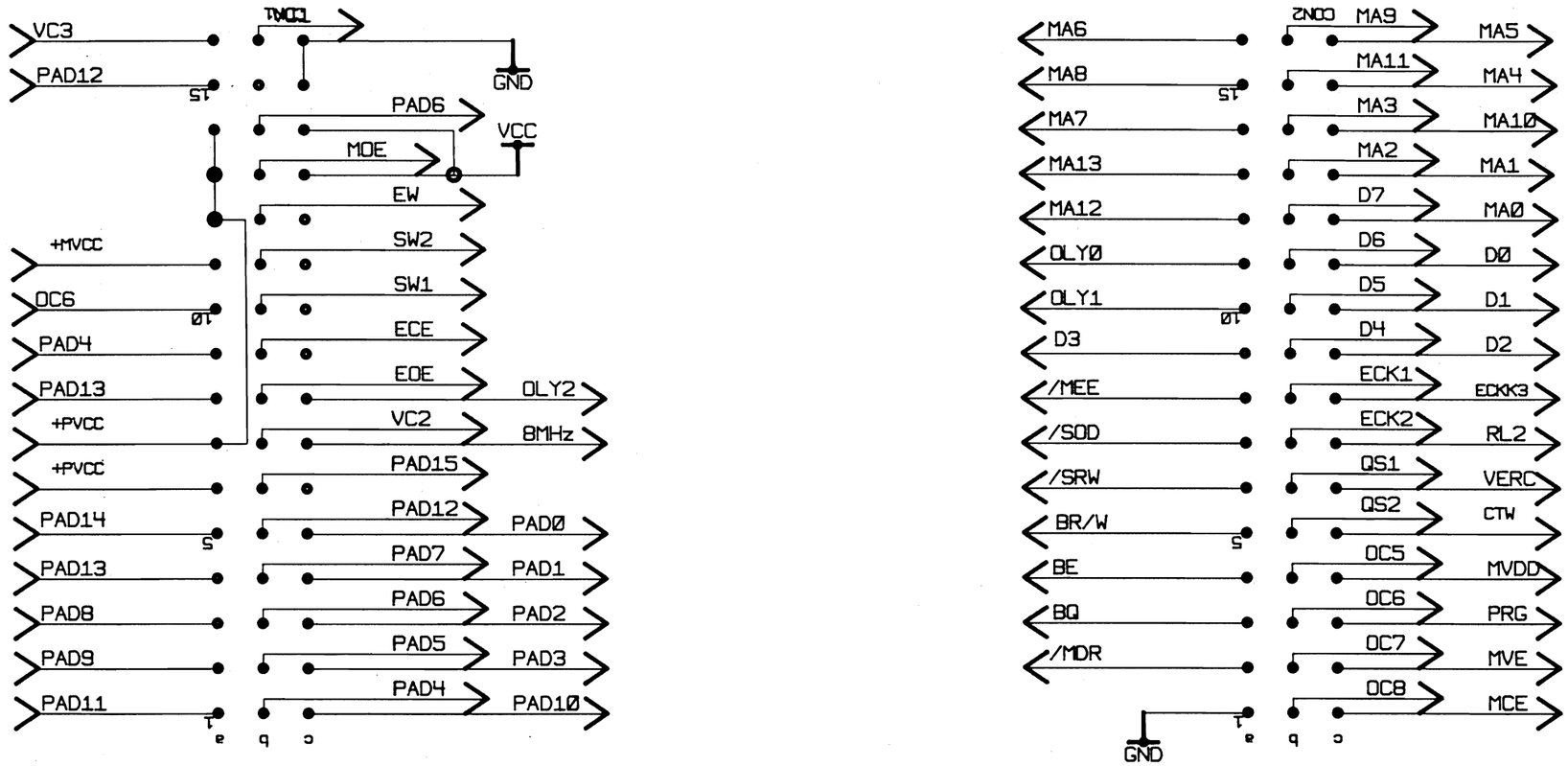

DRAWN	ISS	DATE	CHANGE No.	APP	ISS	DATE	CHANGE No.	APP
R.W.								
CHECKED	4	17·8·87	CIS 1136					
	3	25·3·87	CIS 1010					
ENGINEERING	2	25·9·87	CIS 910					
APPROVED	1	16·9·87	CIS 902					

LIMITS UNLESS OTHERWISE STATED
1 DECIMAL PLACE ± 0.4mm
2 DECIMAL PLACES ± 0.25mm
3 DECIMAL PLACES ± 0.15mm
ANGLES ± ½°

THREADS TO BS 1580
DIMENSIONS APPLY AFTER FINISHING

DIMENSIONS IN

SCALE

MATERIAL

FINISH

stag ELECTRONIC DESIGNS LTD

THIS DRAWING DOCUMENT IS ISSUED BY STAG ELECTRONIC DESIGNS LTD. ON THE UNDERSTANDING THAT IT IS STRICTLY CONFIDENTIAL AND MAY NOT BE REPRODUCED OR UTILISED IN ANY WAY WITHOUT PRIOR WRITTEN PERMISSION OF THE COMPANY.

TITLE
MICRO MODULE 41M200
PCB CIRCUIT DIAGRAM

DRG No. 115-0270

SHT 2 OF 2

USED ON
115-0331
115-0371

IF IN DOUBT - ASK!

REMOVE ALL BURRS AND SHARP EDGES

THIRD ANGLE PROJECTION

ISS	CHANGES (DETAILS ONLY)

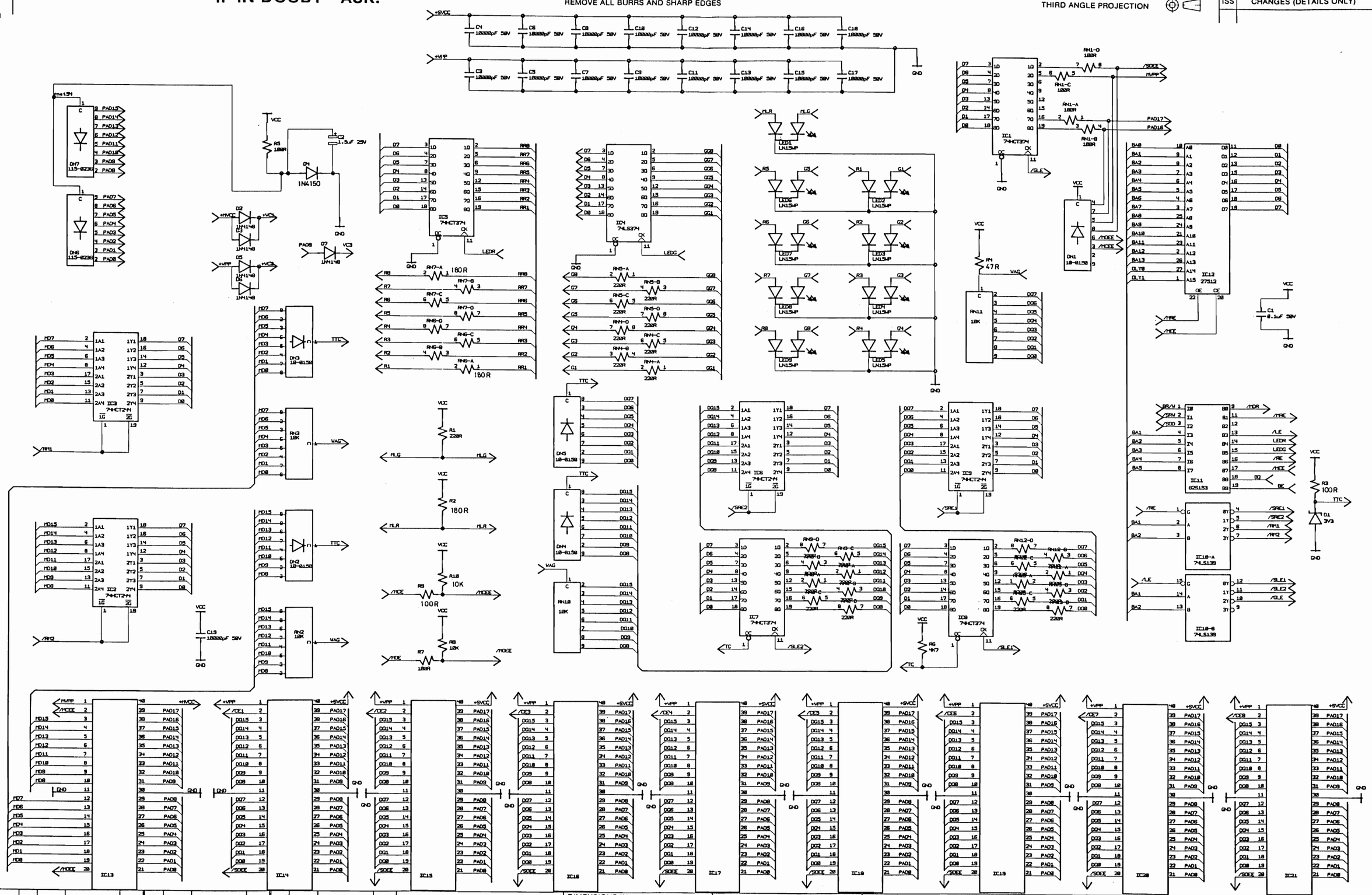

WN R.W.													
CHECKED													
ENGINEERING	1	18687	CIS 1073	TCC									
APPROVED	B	3·4·87	C.I.S. 1013	TCC									
	A	19·1·87	C.I.S. 965										
	ISS	DATE	CHANGE No	APP	ISS	DATE	CHANGE No	APP	ISS	DATE	CHANGE No	APP	

LIMITS UNLESS OTHERWISE STATED
1 DECIMAL PLACE ± 0.4mm
2 DECIMAL PLACES ± 0.25mm
3 DECIMAL PLACES ± 0.15mm

THREADS TO BS 1580
DIMENSIONS APPLY AFTER FINISHING

DIMENSIONS IN ____ SCALE ____
MATERIAL ____
FINISH ____

stag electronic designs LTD

TITLE
40M102 / 41M102 P.C.B. CIRCUIT DIAGRAM.

THIS DRAWING DOCUMENT IS ISSUED BY STAG ELECTRONIC DESIGNS LTD ON THE UNDERSTANDING THAT IT IS STRICTLY CONFIDENTIAL AND MAY NOT BE REPRODUCED OR UTILISED IN ANY WAY WITHOUT THE PRIOR WRITTEN PERMISSION OF THE COMPANY.

DRG. No.
115 - 0330
SHT. 1 OF 2

SHT 2 OF 2

USED ON
115-0331
115-0371

IF IN DOUBT - ASK!

REMOVE ALL BURRS & SHARP EDGES

THIRD ANGLE PROJECTION

ISS	CHANGES (DETAILS ONLY)

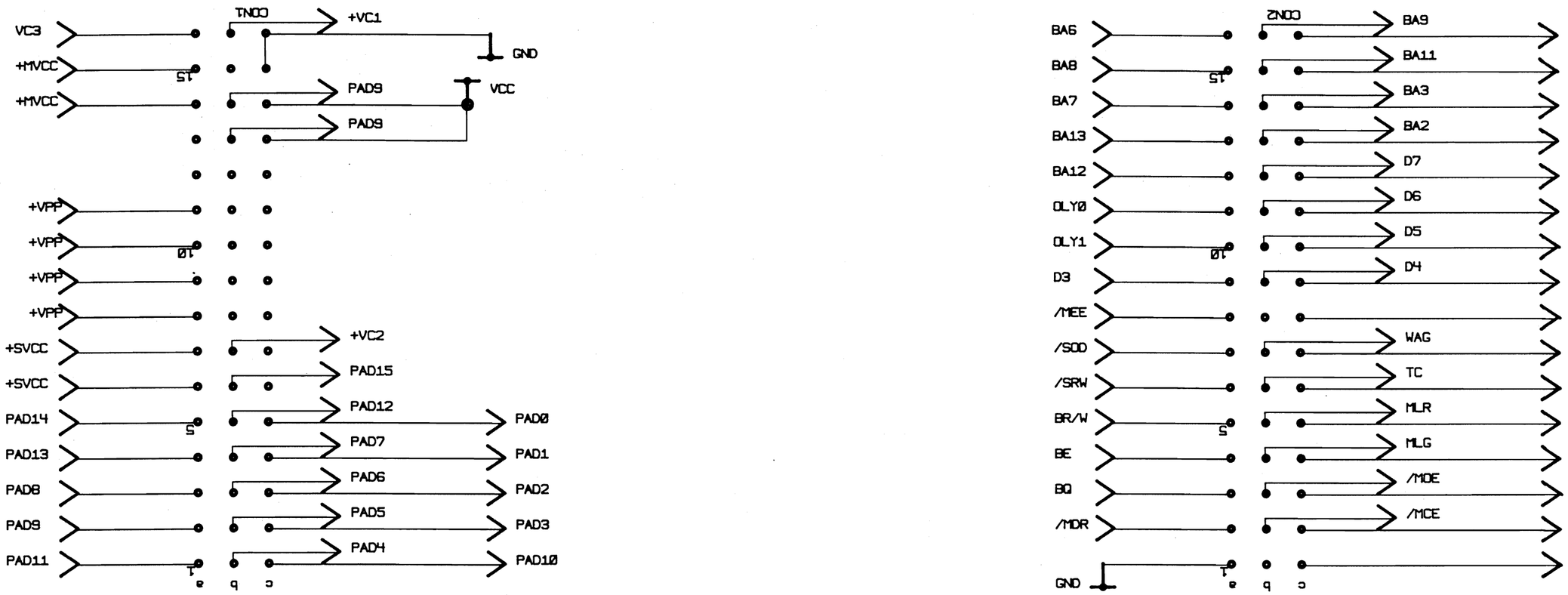

DRAWN R.W.								
CHECKED								
	1	186·87	CIS 1073					
ENGINEERING	B	3 4·87	C.I.S. 1013					
APPROVED	A	19·1·87	C.I.S. 965					
	ISS	DATE	CHANGE No.	APP	ISS	DATE	CHANGE No.	APP

LIMITS UNLESS OTHERWISE STATED
1 DECIMAL PLACE ± 0.4mm
2 DECIMAL PLACES ± 0.25mm
3 DECIMAL PLACES ± 0.15mm
ANGLES ± ½°

THREADS TO BS 1580
DIMENSIONS APPLY AFTER FINISHING

DIMENSIONS IN ——— SCALE ———

MATERIAL ———

FINISH ———

stag electronic designs LTD

THIS DRAWING DOCUMENT IS ISSUED BY STAG ELECTRONIC DESIGNS LTD. ON THE UNDERSTANDING THAT IT IS STRICTLY CONFIDENTIAL AND MAY NOT BE REPRODUCED OR UTILISED IN ANY WAY WITHOUT PRIOR WRITTEN PERMISSION OF THE COMPANY.

TITLE
40M102 / 41M102
P.C.B. CIRCUIT DIAGRAM

DRG No. 115-0330
SHT 2 OF 2

USED ON
115-0351

IF IN DOUBT - ASK!

REMOVE ALL BURRS AND SHARP EDGES

THIRD ANGLE PROJECTION

ISS	CHANGES (DETAILS ONLY)

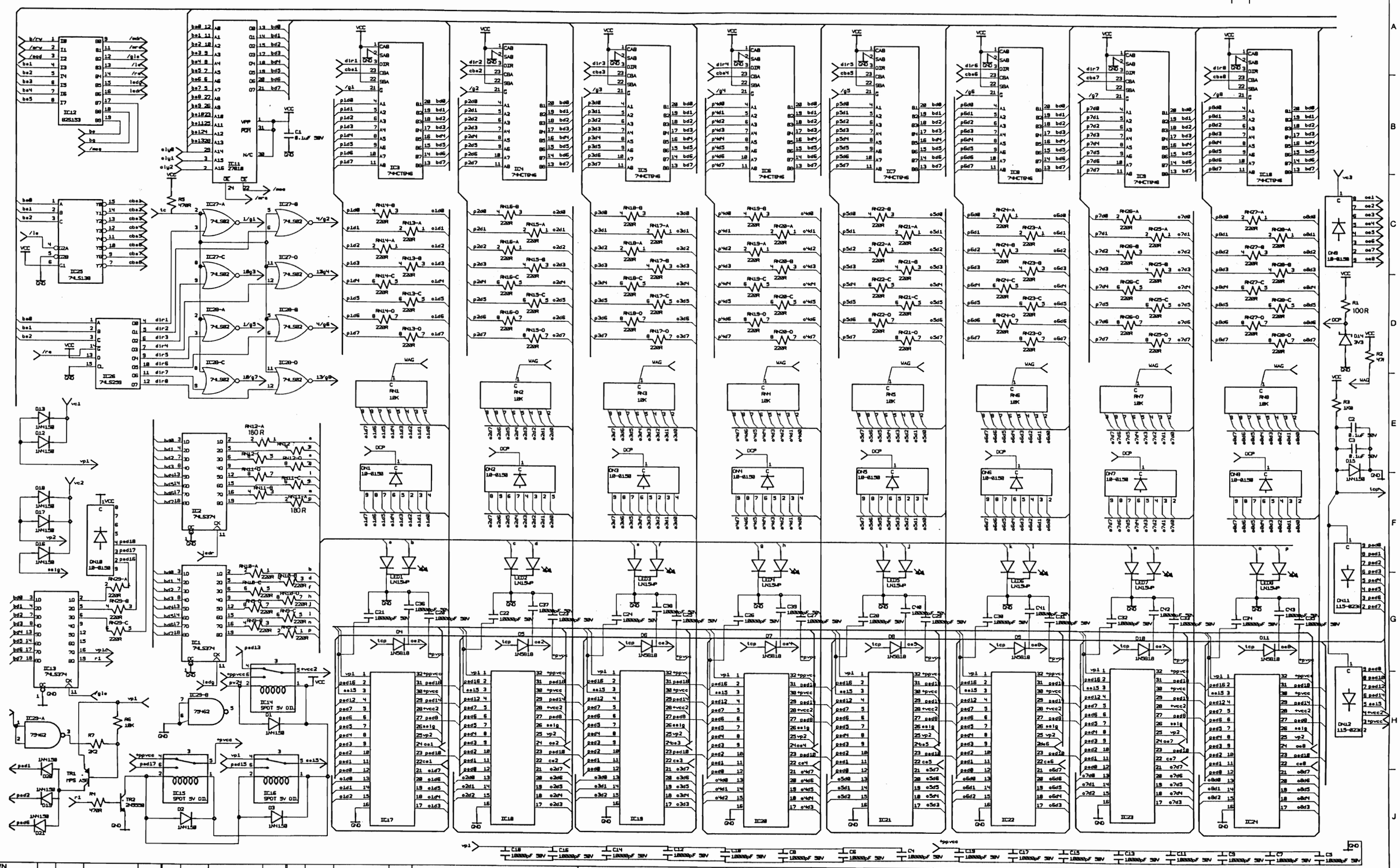

DRAWN R.W.																			
CHECKED																			
ENGINEERING	1	9·7·87	CIS 1101	T.C.C.															
APPROVED	B	3·4·87	C.I.S. 1012	T.C.C.															
	A	27.2.87	C.I.S. 992																
	ISS	DATE	CHANGE No	APP	ISS	DATE	CHANGE No	APP	ISS	DATE	CHANGE No	APP							

LIMITS UNLESS OTHERWISE STATED

1 DECIMAL PLACE ± 0.4mm
2 DECIMAL PLACES ± 0.25mm
3 DECIMAL PLACES ± 0.15mm

THREADS TO BS 1580
DIMENSIONS APPLY AFTER FINISHING

DIMENSIONS IN ——— SCALE ———

MATERIAL ———

FINISH ———

stag electronic designs ltd

TITLE
42M101 P.C.B. CIRCUIT DIAGRAM

THIS DRAWING DOCUMENT IS ISSUED BY STAG ELECTRONIC DESIGNS LTD ON THE UNDERSTANDING THAT IT IS STRICTLY CONFIDENTIAL AND MAY NOT BE REPRODUCED OR UTILISED IN ANY WAY WITHOUT THE PRIOR WRITTEN PERMISSION OF THE COMPANY

DRG. No.
115-0350

SHT. 1 OF 2

SHT 2 OF 2

USED ON
115-034

IF IN DOUBT - ASK!

REMOVE ALL BURRS & SHARP EDGES

THIRD ANGLE PROJECTION

ISS	CHANGES (DETAILS ONLY)

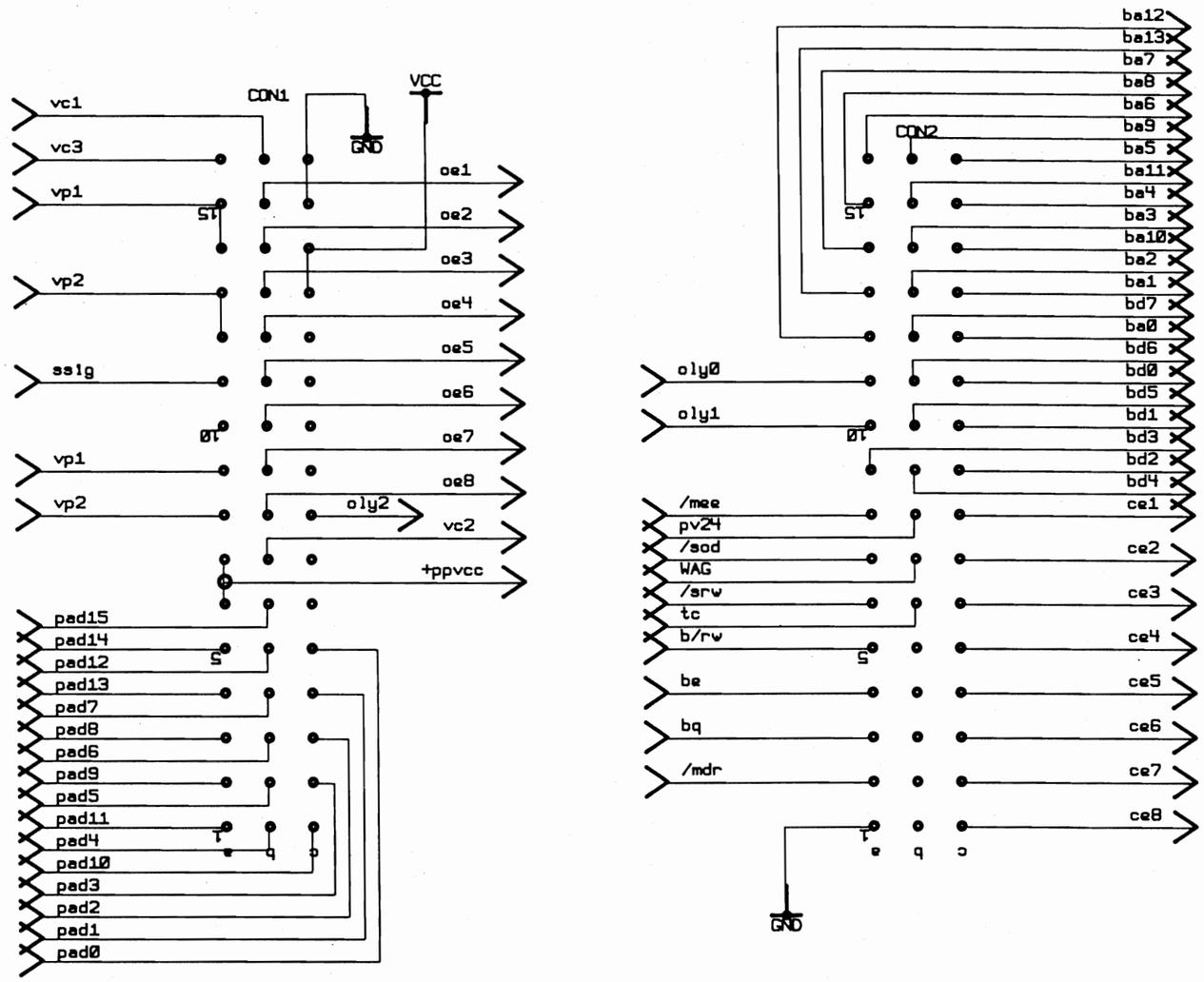

DRAWN R.W.								
CHECKED								
	1	9·7·87	CIS 1101	T.C.C				
ENGINEERING	B	3·4·87	C.I.S. 1012	T.C.C				
APPROVED	A	27·2·87	C.I.S. 992					
	ISS	DATE	CHANGE No.	APP	ISS	DATE	CHANGE No.	APP

LIMITS UNLESS OTHERWISE STATED
1 DECIMAL PLACE ± 0.4mm
2 DECIMAL PLACES ± 0.25mm
3 DECIMAL PLACES ± 0.15mm
ANGLES ± ½°

THREADS TO BS 1580
DIMENSIONS APPLY AFTER FINISHING

DIMENSIONS IN ___ SCALE ___

MATERIAL ___

FINISH ___

stag ELECTRONIC DESIGNS LTD

TITLE
42M101 P.C.B CIRCUIT DIAGRAM

THIS DRAWING DOCUMENT IS ISSUED BY STAG ELECTRONIC DESIGNS LTD. ON THE UNDERSTANDING THAT IT IS STRICTLY CONFIDENTIAL AND MAY NOT BE REPRODUCED OR UTILISED IN ANY WAY WITHOUT PRIOR WRITTEN PERMISSION OF THE COMPANY.

DRG No.
115-0350
SHT 2 OF 2

USED ON

IF IN DOUBT - ASK!

REMOVE ALL BURRS AND SHARP EDGES

THIRD ANGLE PROJECTION

ISS	CHANGES (DETAILS ONLY)

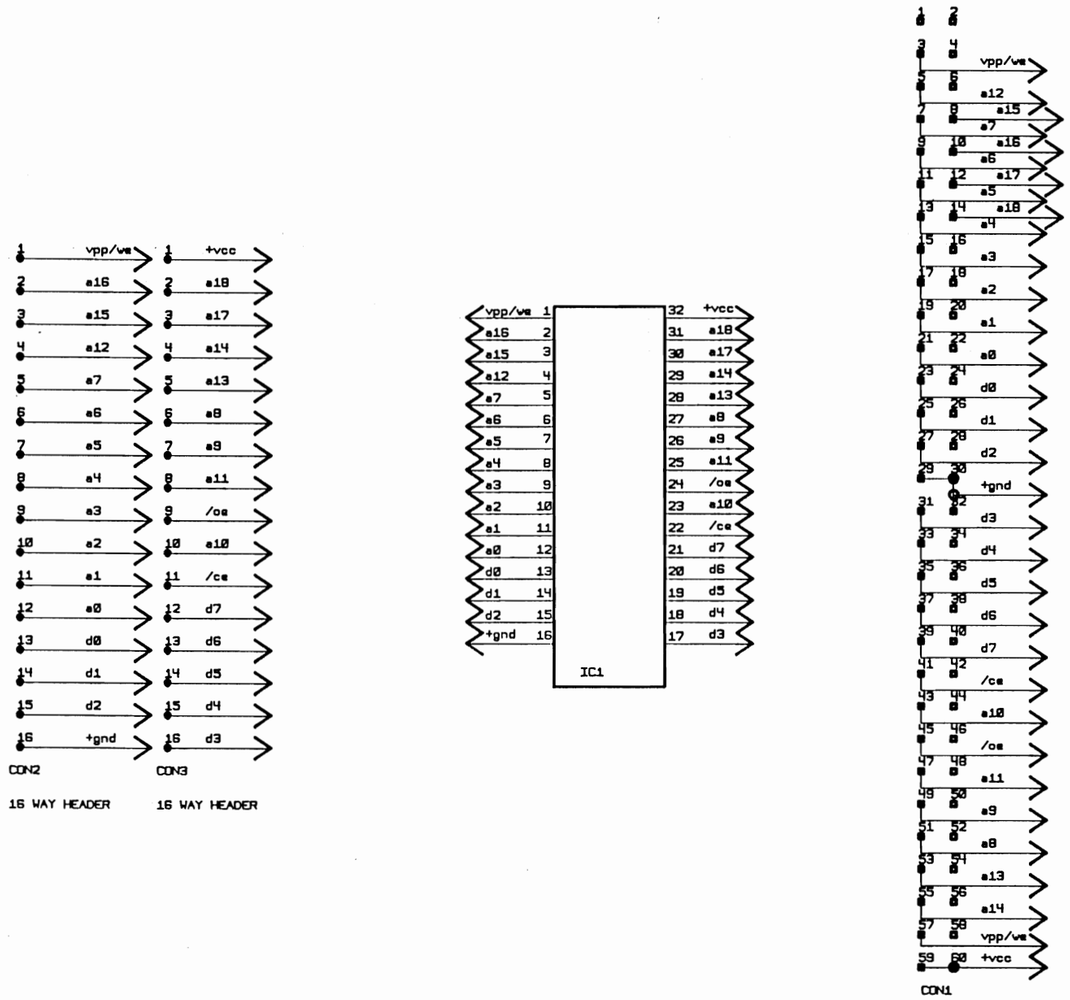

DRAWN									
H.M.G.									
CHECKED									
ENGINEERING	2	4·3·88	C.I.S. 1243	T.E.C.					
APPROVED	1	20·10·88	C.I.S. 1178						
	ISS	DATE	CHANGE No	APP	ISS	DATE	CHANGE No	APP	

LIMITS UNLESS OTHERWISE STATED
1 DECIMAL PLACE ± 0.4mm
2 DECIMAL PLACES ± 0.25mm
3 DECIMAL PLACES ± 0.15mm
ANGLES ± ½°

THREADS TO BS 1580
DIMENSIONS APPLY AFTER FINISHING

DIMENSIONS IN | SCALE

MATERIAL

FINISH

stag ELECTRONIC DESIGNS LTD

TITLE
41M901 (MASTER)
P.C.B. ASSY. CIRCUIT DIAGRAM

THIS DRAWING DOCUMENT IS ISSUED BY STAG ELECTRONIC DESIGNS LTD ON THE UNDERSTANDING THAT IT IS STRICTLY CONFIDENTIAL AND MAY NOT BE REPRODUCED OR UTILISED IN ANY WAY WITHOUT THE PRIOR WRITTEN PERMISSION OF THE COMPANY.

DRG. No.
115-0410
SHT. 1 OF 1

0645-188T

USED ON

IF IN DOUBT - ASK!

REMOVE ALL BURRS AND SHARP EDGES

THIRD ANGLE PROJECTION

ISS	CHANGES (DETAILS ONLY)

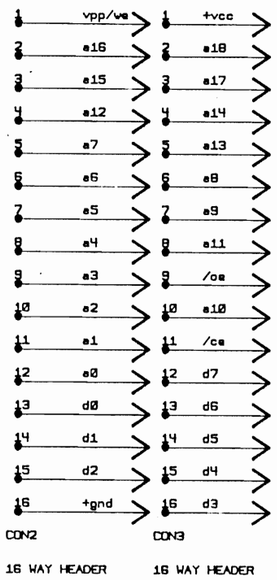

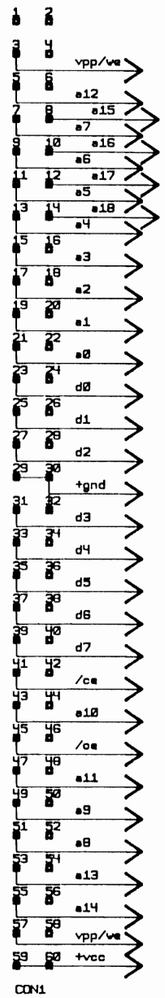

PRODUCTION DRAWING

DRAWN HMG									
CHECKED									
ENGINEERING									
APPROVED	1	7·3·88	C.I.S. 1243	T.C.C.					
	ISS	DATE	CHANGE No	APP	ISS	DATE	CHANGE No	APP	

LIMITS UNLESS OTHERWISE STATED
1 DECIMAL PLACE ± 0.4mm
2 DECIMAL PLACES ± 0.25mm
3 DECIMAL PLACES ± 0.15mm
ANGLES ± ½°

THREADS TO BS 1580
DIMENSIONS APPLY AFTER FINISHING

DIMENSIONS IN

SCALE

MATERIAL

FINISH

stag ELECTRONIC DESIGNS LTD

TITLE
41M901 (SLAVE) P.C.B. ASSY. CIRCUIT DIAGRAM

THIS DRAWING DOCUMENT IS ISSUED BY STAG ELECTRONIC DESIGNS LTD ON THE UNDERSTANDING THAT IT IS STRICTLY CONFIDENTIAL AND MAY NOT BE REPRODUCED OR UTILISED IN ANY WAY WITHOUT THE PRIOR WRITTEN PERMISSION OF THE COMPANY.

DRG. No.
115-0420
SHT. 1 OF 1

0645-188T

USED ON 115-0581

IF IN DOUBT - ASK!

REMOVE ALL BURRS AND SHARP EDGES

THIRD ANGLE PROJECTION

ISS	CHANGES (DETAILS ONLY)

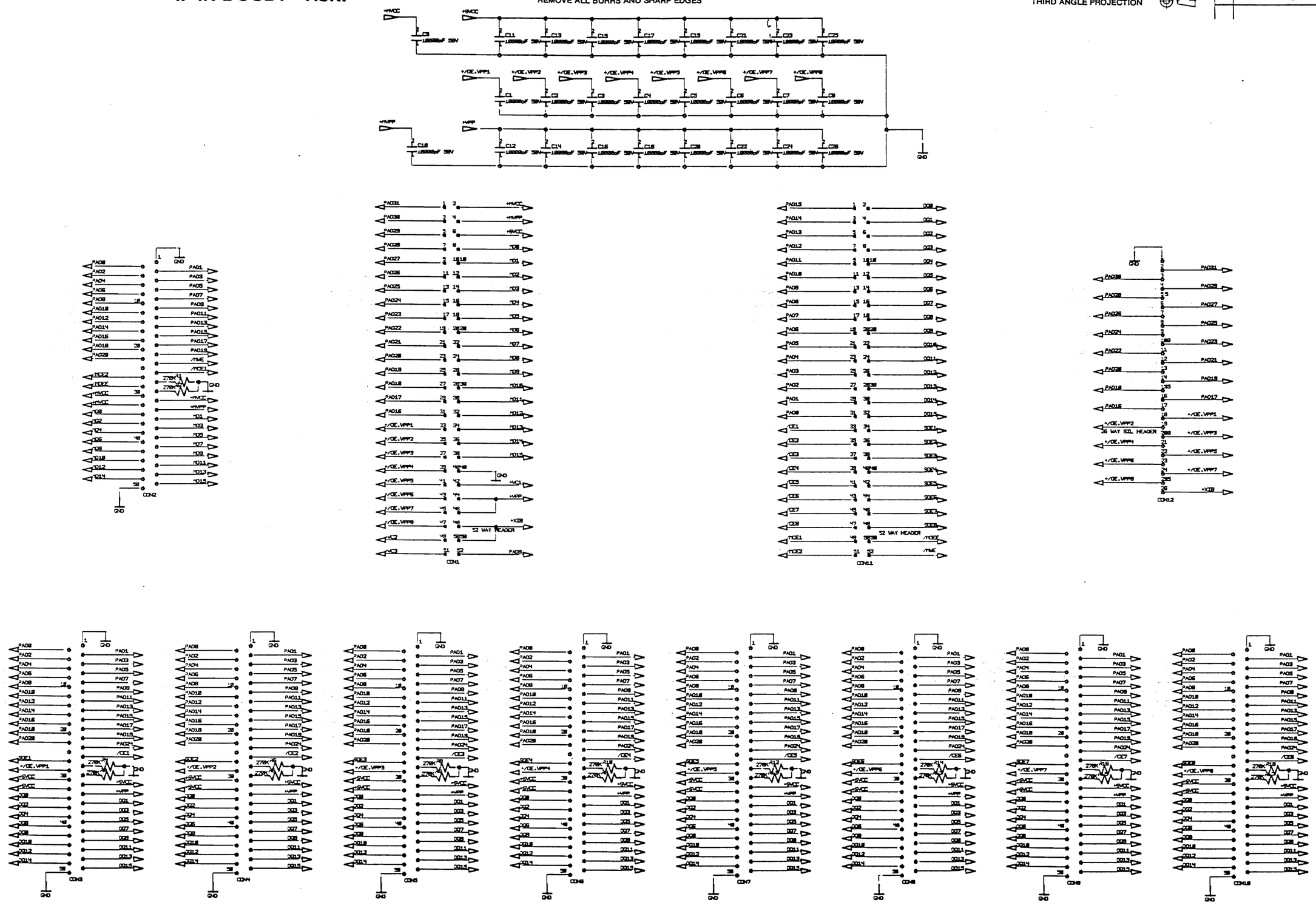

DRAWN H.M.G.												
CHECKED												
ENGINEERING												
APPROVED	1	13·4·89	C.I.S. 1403									
	ISS	DATE	CHANGE No	APP	ISS	DATE	CHANGE No	APP	ISS	DATE	CHANGE No	APP

LIMITS UNLESS OTHERWISE STATED

1 DECIMAL PLACE ± 0.4mm
2 DECIMAL PLACES ± 0.25mm
3 DECIMAL PLACES ± 0.15mm

THREADS TO BS 1580
DIMENSIONS APPLY AFTER FINISHING

DIMENSIONS IN

SCALE

MATERIAL

FINISH

stag electronic designs LTD

TITLE

41M910 P.C.B. ASSY. CIRCUIT DIAGRAM

THIS DRAWING DOCUMENT IS ISSUED BY STAG ELECTRONIC DESIGNS LTD ON THE UNDERSTANDING THAT IT IS STRICTLY CONFIDENTIAL AND MAY NOT BE REPRODUCED OR UTILISED IN ANY WAY WITHOUT THE PRIOR WRITTEN PERMISSION OF THE COMPANY.

DRG. No. 115-0580

SHT. 1 OF 1

SHT 1 OF 2

USED ON 115-1011

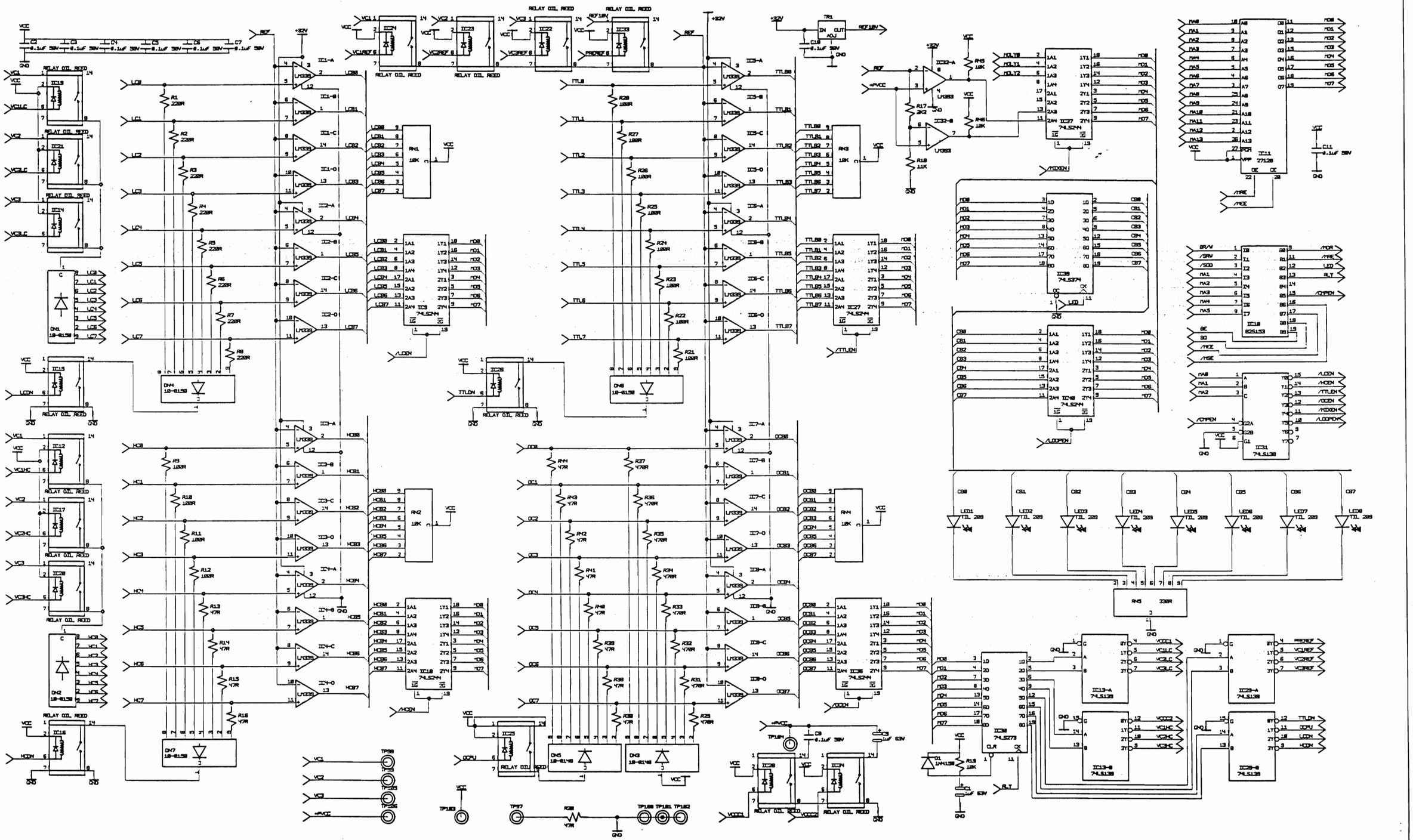

SHT 1 OF 2

USED ON 115-1011

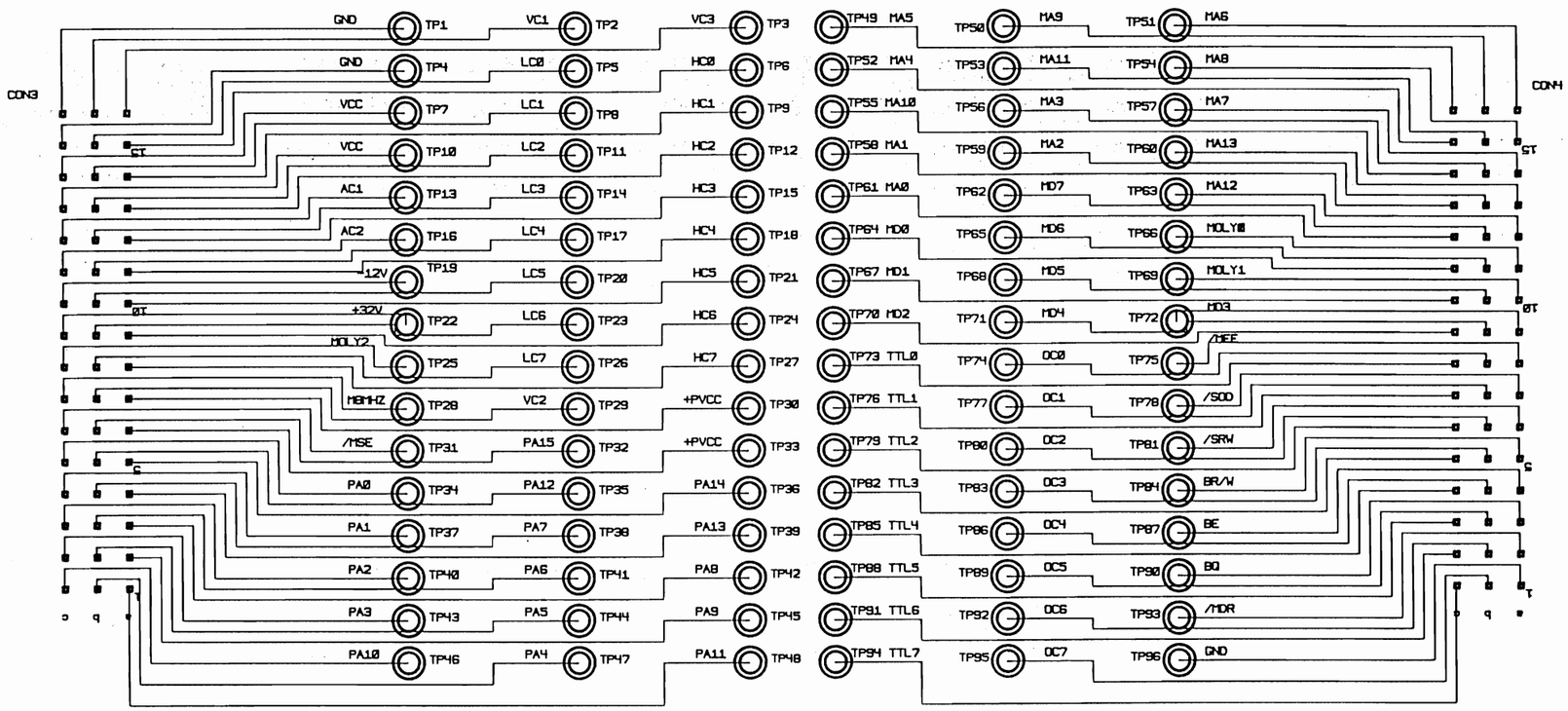

DRAWN HMG					
TRACED					
CHECKED					
APPROVED	A	27 2 87	CIS 993		
	ISS	DATE	CHANGE No	APP	

LIMITS UNLESS OTHERWISE STATED

1 DECIMAL PLACE ± 1.0mm.
2 DECIMAL PLACES ± 0.4mm.
3 DECIMAL PLACES ± 0.1mm.
ANGLES ± ½°

THREADS TO BS 1580
DIMENSIONS APPLY AFTER FINISHING.
REMOVE ALL BURRS AND SHARP EDGES

DIMENSIONS IN ____ SCALE ____

MATERIAL ____

FINISH ____

stag electronic designs LTD

TITLE
PP40 TEST MODULE PCB ASSY
CIRCUIT DIAGRAM

THIS DRAWING DOCUMENT IS ISSUED BY STAG ELECTRONIC DESIGNS LTD ON THE UNDERSTANDING THAT IT IS STRICTY CONFIDENTIAL AND MAY NOT BE REPRODUCED OR UTILISED IN ANY WAY WITHOUT THE PRIOR WRITTEN PERMISSION OF THE COMPANY

DRG No 115-1010

SHT 2 OF 2

MASTERANGE M69

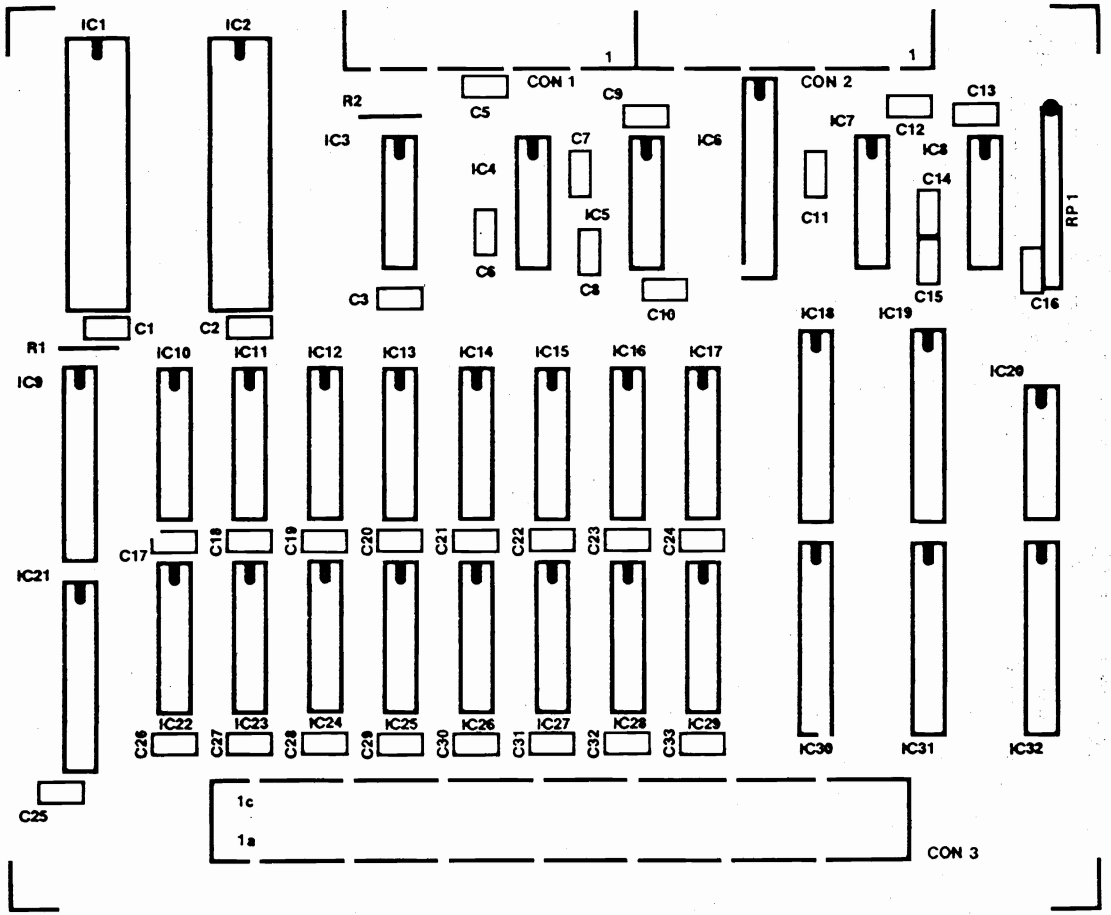

DWG. CIRCUITPLAN			DWG. INCHES	stag electronic designs LTD
DATE 15.4.85			SCALE 2:1	
APP.			TITLE PP40 RAM I/O P.C.B SILKSCREEN	
3	4.4.86	C.I.S. 810		
2	3.12.85	C.I.S. 791		
1	15.4.85	C.I.S. 705	DRG. No. 110-0085	
ISS.	DATE	CHANGE No.		

USED ON

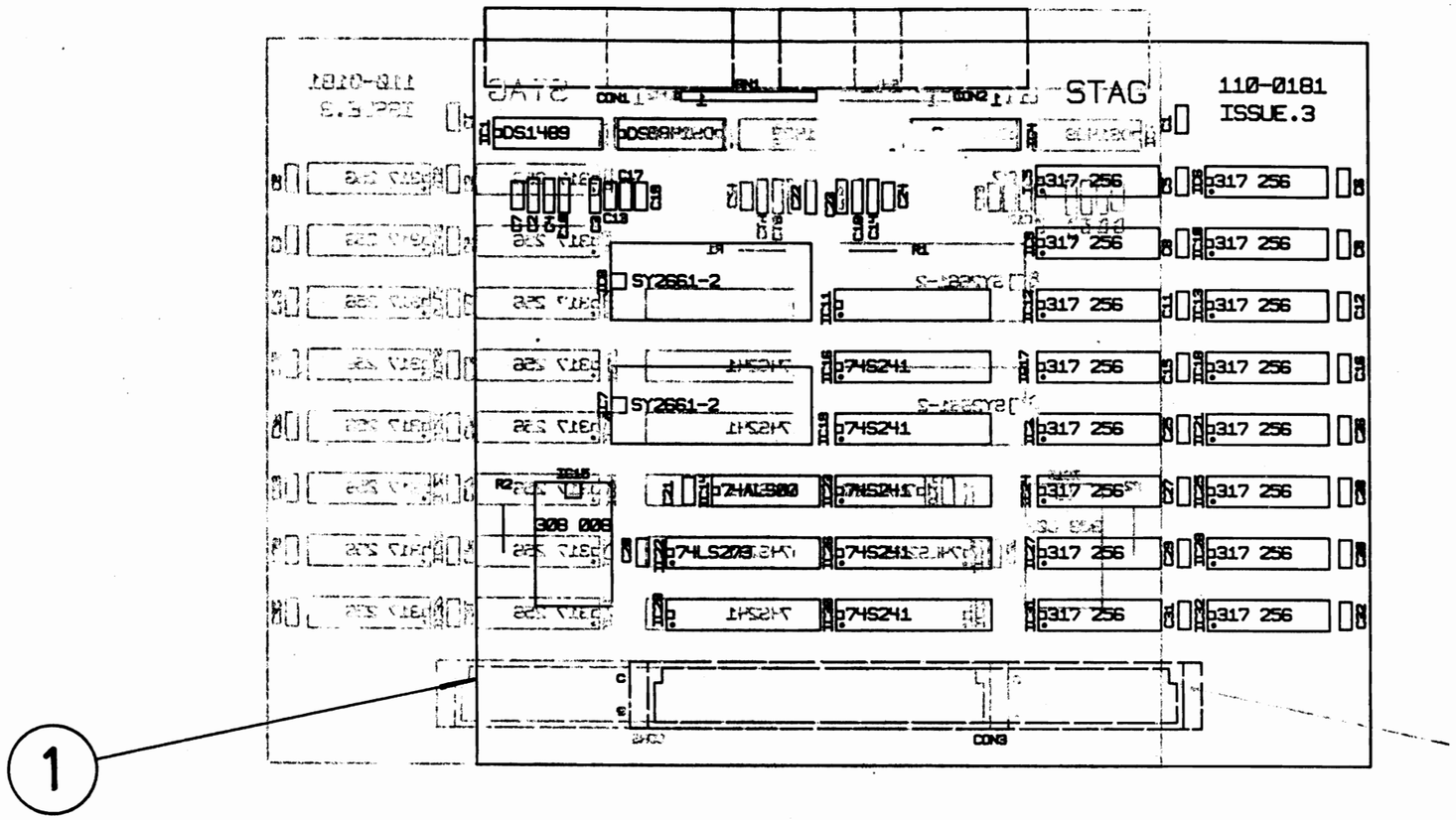

NOTE : I.C.6
I.C.10
I.C.13
I.C.18
I.C.21
I.C.23
I.C.25
I.C.28
I.C.32

ARE NOT FITTED ON THIS ASSY.

DRAWN D.M				
TRACED	3	6-8-86	CIS 872	
CHECKED	2	14-7-86	CIS 860	
APPROVED	1	17-6-86	CIS 849	
	ISS	DATE	CHANGE No.	APP

LIMITS UNLESS OTHERWISE STATED
1 DECIMAL PLACE ± 1.0mm.
2 DECIMAL PLACES ± 0.4mm.
3 DECIMAL PLACES ± 0.1mm.
ANGLES ± ½°
THREADS TO BS 1580.
DIMENSIONS APPLY AFTER FINISHING.
REMOVE ALL BURRS AND SHARP EDGES.

DIMENSIONS IN M.M.
SCALE F.S

stag electronic DESIGNS LTD

TITLE
PP40 RAM I/O (0·5MbRAM).
PCB ASSY

DRG. No.
110-0181

THIS DRAWING DOCUMENT IS ISSUED BY STAG ELECTRONIC DESIGNS LTD. ON THE UNDERSTANDING THAT IT IS STRICTLY CONFIDENTIAL AND MAY NOT BE REPRODUCED OR UTILISED IN ANY WAY WITHOUT PRIOR WRITTEN PERMISSION OF THE COMPANY.

110-0201

USED ON

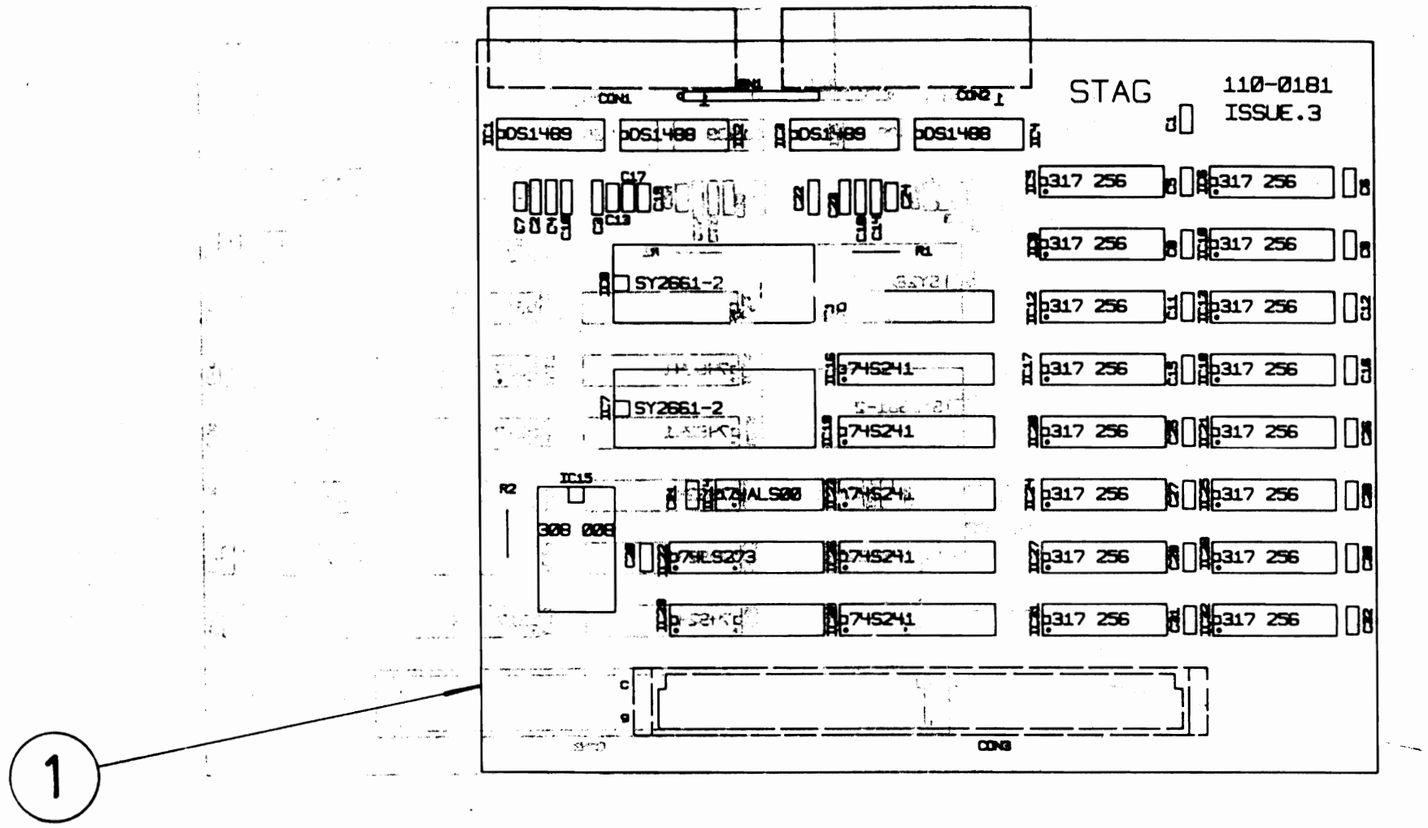

DRAWN D.M					LIMITS UNLESS OTHERWISE STATED	DIMENSIONS IN M.M.	SCALE F.S	stag electronic designs LTD
TRACED	3	6·8·86	CIS 872		1 DECIMAL PLACE ± 1.0mm. 2 DECIMAL PLACES ± 0.4mm. 3 DECIMAL PLACES ± 0.1mm. ANGLES ± ½°	THREADS TO BS 1580 DIMENSIONS APPLY AFTER FINISHING. REMOVE ALL BURRS AND SHARP EDGES.	MATERIAL	
CHECKED	2	14·7·86	CIS 860				FINISH	
APPROVED	1	17·6·86	CIS 849					
	ISS	DATE	CHANGE No.	APP				

THIS DRAWING DOCUMENT IS ISSUED BY STAG ELECTRONIC DESIGNS LTD. ON THE UNDERSTANDING THAT IT IS STRICTLY CONFIDENTIAL AND MAY NOT BE REPRODUCED OR UTILISED IN ANY WAY WITHOUT PRIOR WRITTEN PERMISSION OF THE COMPANY.

TITLE
PP40 RAM I/O (1·0MbRAM)
PCB ASSY

DRG. No.
110-0201

M21

110-0221

USED ON

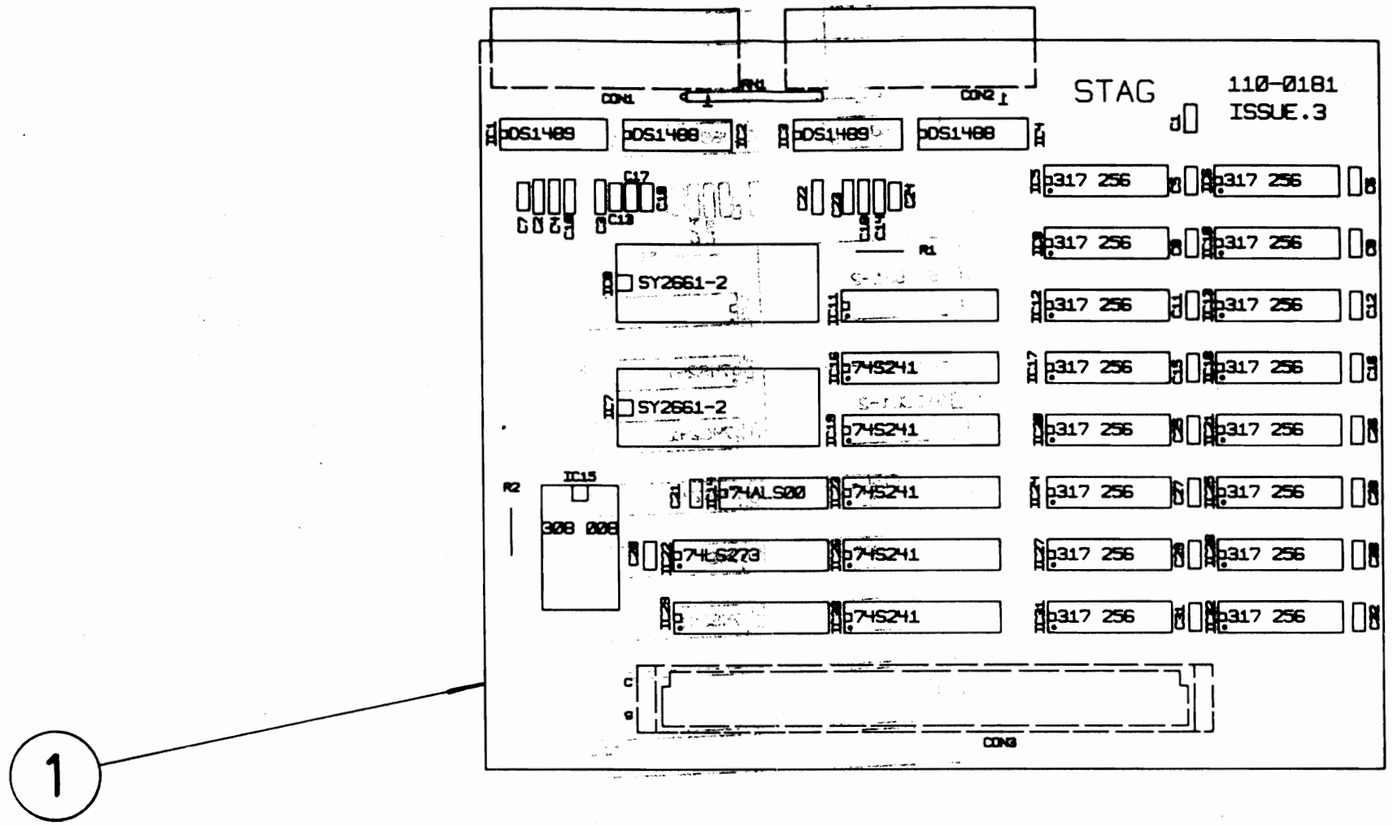

NOTE : I.C.6
I.C.10
I.C.13
I.C.18
I.C.21
I.C.23
I.C.25
I.C.28
I.C.32

ARE NOT FITTED ON THIS ASSY.

DRAWN D.M				
TRACED	3	6·8·86	CIS 872	
	2	14·7·86	CIS 860	
CHECKED	1	17·6·86	CIS 849	
APPROVED	ISS	DATE	CHANGE No.	APP

LIMITS UNLESS OTHERWISE STATED
1 DECIMAL PLACE ± 1.0mm.
2 DECIMAL PLACES ± 0.4mm.
3 DECIMAL PLACES ± 0.1mm.
ANGLES ± ½°
THREADS TO BS 1580
DIMENSIONS APPLY AFTER FINISHING.
REMOVE ALL BURRS AND SHARP EDGES

DIMENSIONS IN M.M.
SCALE F.S
MATERIAL
FINISH

stag electronic designs LTD

TITLE
PP40 RAM I/O (2·0MbRAM)
PCB ASSY

THIS DRAWING DOCUMENT IS ISSUED BY STAG ELECTRONIC DESIGNS LTD. ON THE UNDERSTANDING THAT IT IS STRICTLY CONFIDENTIAL AND MAY NOT BE REPRODUCED OR UTILISED IN ANY WAY WITHOUT PRIOR WRITTEN PERMISSION OF THE COMPANY.

DRG. No. 110 -0221

M21

110-0241

USED ON

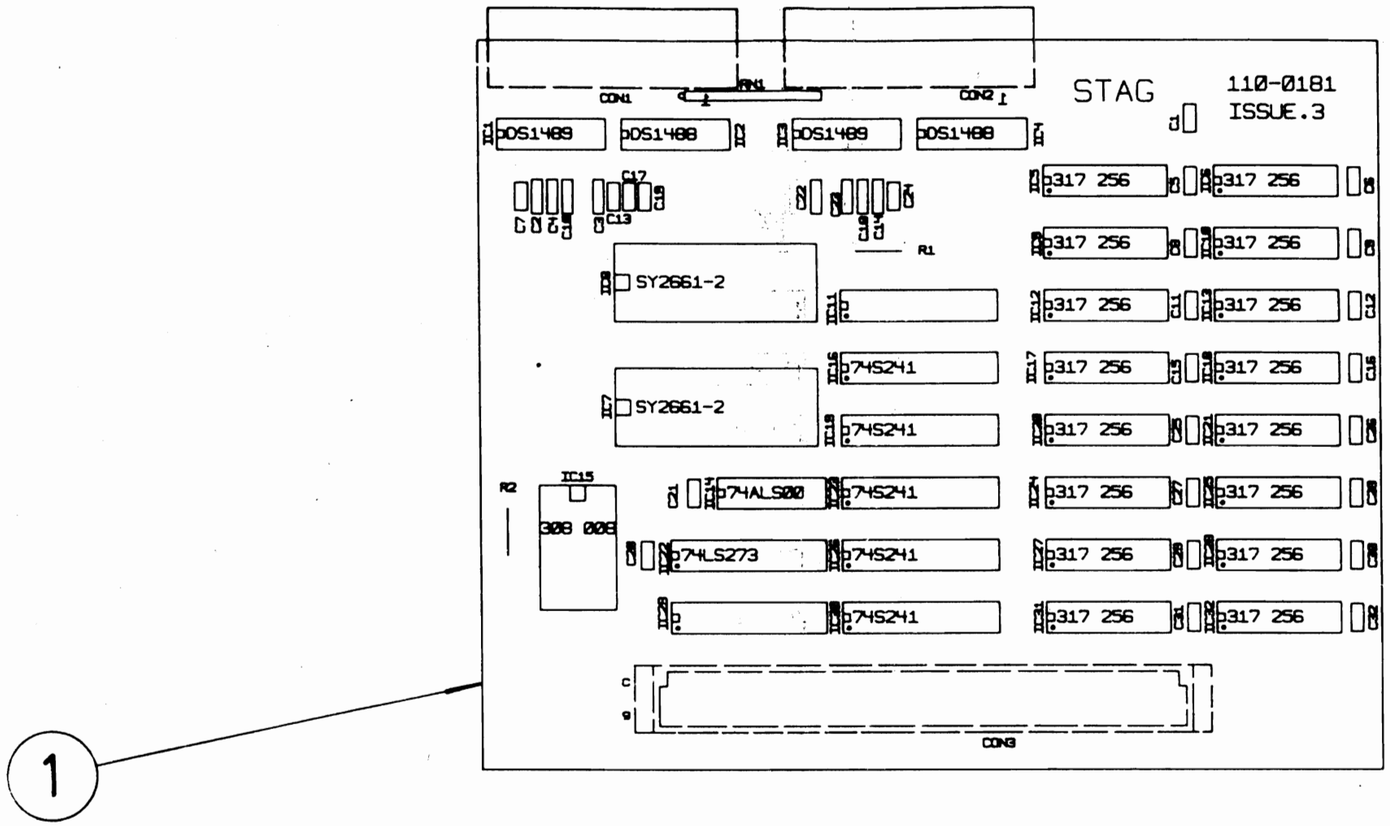

DRAWN D.M					LIMITS UNLESS OTHERWISE STATED 1 DECIMAL PLACE ± 1.0mm. 2 DECIMAL PLACES ± 0.4mm. 3 DECIMAL PLACES ± 0.1mm. ANGLES ± ½° THREADS TO BS 1580 DIMENSIONS APPLY AFTER FINISHING. REMOVE ALL BURRS AND SHARP EDGES	DIMENSIONS IN M.M. / SCALE F.S
TRACED	3	6·8·86	CIS 872			MATERIAL
CHECKED	2	14·7·86	CIS 860			FINISH
APPROVED	1	17·6·86	CIS 849			
	ISS	DATE	CHANGE No.	APP		

stag electronic designs LTD

THIS DRAWING DOCUMENT IS ISSUED BY STAG ELECTRONIC DESIGNS LTD. ON THE UNDERSTANDING THAT IT IS STRICTLY CONFIDENTIAL AND MAY NOT BE REPRODUCED OR UTILISED IN ANY WAY WITHOUT PRIOR WRITTEN PERMISSION OF THE COMPANY.

TITLE
PP40 RAM I/O (4·0MbRAM)
PCB ASSY

DRG. No.
110-0241

M21

SHT 1 OF 2

USED ON

ASK! REMOVE ALL BURRS & SHARP EDGES

THIRD ANGLE PROJECTION

ISS	CHANGES (DETAILS ONLY)

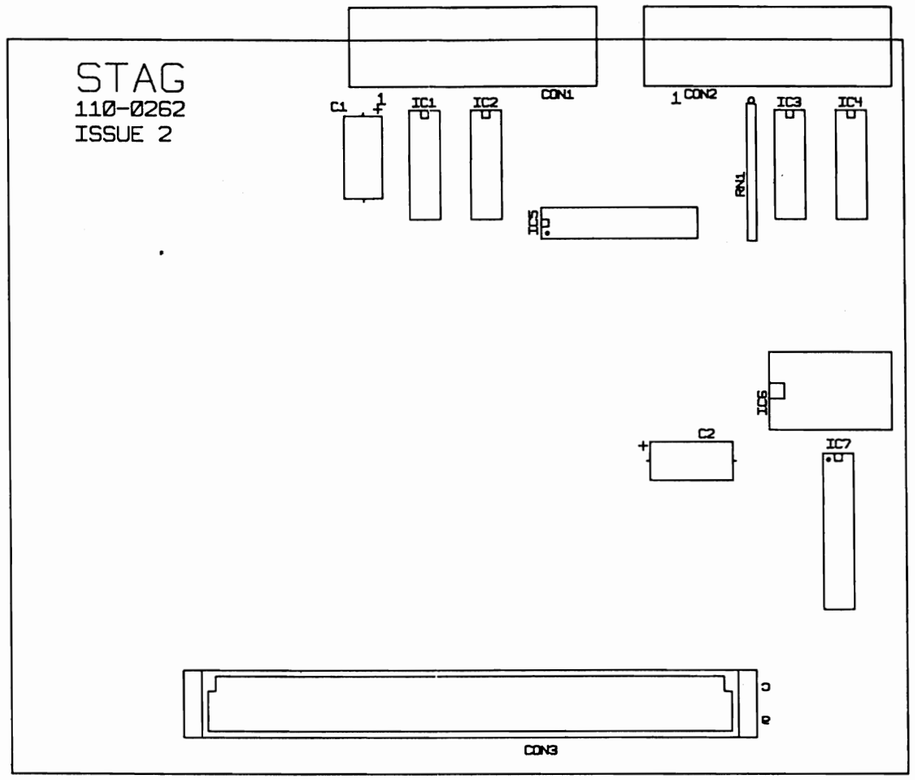

DRAWN HMG									
CHECKED									
	1	15·8·88	CIS 1307						
ENGINEERING	B	20·8·87	C.I.S. 1137						
APPROVED	A	29·5·87	C.I.S. 1047						
	ISS	DATE	CHANGE No.	APP	ISS	DATE	CHANGE No.	APP	

LIMITS UNLESS OTHERWISE STATED
1 DECIMAL PLACE ± 0.4mm
2 DECIMAL PLACES ± 0.25mm
3 DECIMAL PLACES ± 0.15mm
ANGLES ± ½°

THREADS TO BS 1580
DIMENSIONS APPLY AFTER FINISHING

DIMENSIONS IN

SCALE 1:1

MATERIAL

FINISH

stag electronic designs LTD

TITLE
PP40RAM (16Mb)
P.C.B. ASSY.

THIS DRAWING DOCUMENT IS ISSUED BY STAG ELECTRONIC DESIGNS LTD. ON THE UNDERSTANDING THAT IT IS STRICTLY CONFIDENTIAL AND MAY NOT BE REPRODUCED OR UTILISED IN ANY WAY WITHOUT PRIOR WRITTEN PERMISSION OF THE COMPANY.

DRG No.
110-0261
SHT 1 OF 2

SHT 2

USED ON

BT-ASK!

REMOVE ALL BURRS & SHARP EDGES

THIRD ANGLE PROJECTION

ISS	CHANGES (DETAILS ONLY)

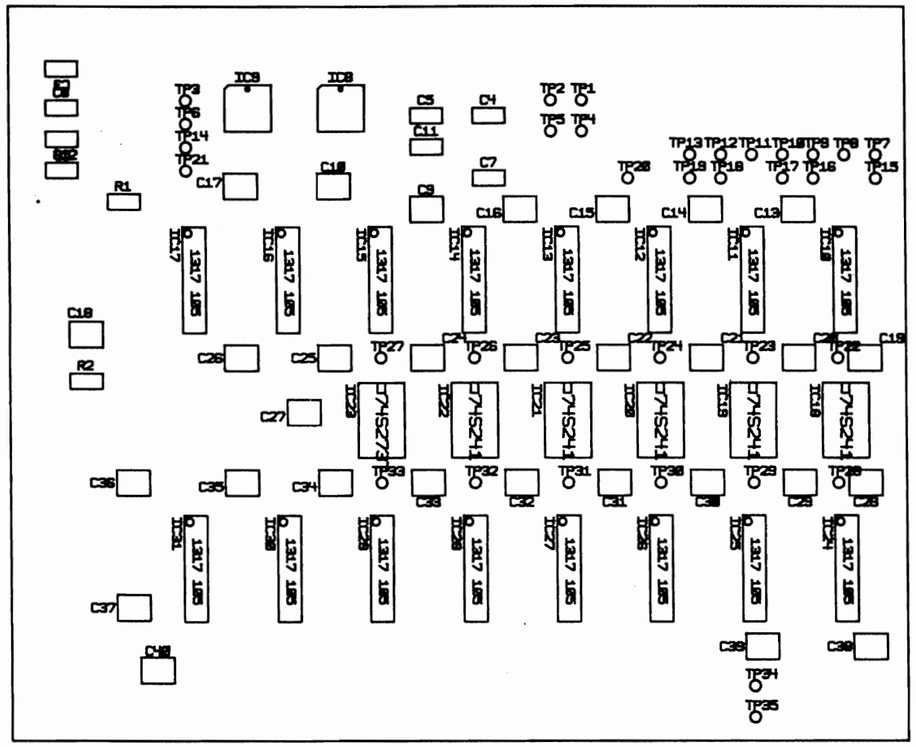

DRAWN HMG									LIMITS UNLESS OTHERWISE STATED	DIMENSIONS IN	SCALE 1:1	stag electronic designs LTD	THIS DRAWING DOCUMENT IS ISSUED BY STAG ELECTRONIC DESIGNS LTD. ON THE UNDERSTANDING THAT IT IS STRICTLY CONFIDENTIAL AND MAY NOT BE REPRODUCED OR UTILISED IN ANY WAY WITHOUT PRIOR WRITTEN PERMISSION OF THE COMPANY.
CHECKED									1 DECIMAL PLACE ± 0.4mm	MATERIAL			
	1	15·8·88	CIS 1307						2 DECIMAL PLACES ± 0.25mm				
ENGINEERING	B	20·8·87	C.I.S. 1137						3 DECIMAL PLACES ± 0.15mm	FINISH		TITLE PP40 RAM (16Mb) P.C.B. ASSY.	DRG No. 110-0261
									ANGLES ± ½°				
APPROVED	A	29·5·87	C.I.S. 1047						THREADS TO BS 1580				
	ISS	DATE	CHANGE No.	APP	ISS	DATE	CHANGE No.	APP	DIMENSIONS APPLY AFTER FINISHING				SHT 2 OF 2

Sht 1 of 2.

USED ON

REMOVE ALL BURRS & SHARP EDGES

THIRD ANGLE PROJECTION

ISS	CHANGES (DETAILS ONLY)

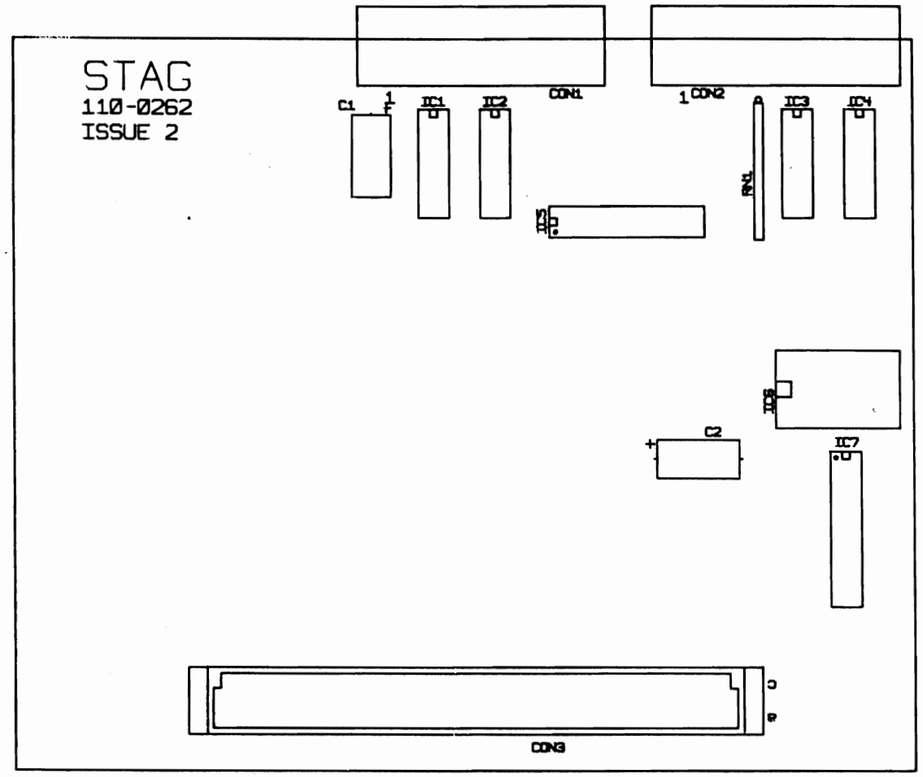

DRAWN C.J.D.									
CHECKED									
ENGINEERING									
APPROVED	1	15·8·88	CIS1307	T.C.C					
	ISS	DATE	CHANGE No.	APP	ISS	DATE	CHANGE No.	APP	

LIMITS UNLESS OTHERWISE STATED
1 DECIMAL PLACE ± 0.4mm
2 DECIMAL PLACES ± 0.25mm
3 DECIMAL PLACES ± 0.15mm
ANGLES ± ½°

THREADS TO BS 1580
DIMENSIONS APPLY AFTER FINISHING

DIMENSIONS IN

SCALE 1:1

MATERIAL

FINISH

stag electronic designs LTD

THIS DRAWING DOCUMENT IS ISSUED BY STAG ELECTRONIC DESIGNS LTD. ON THE UNDERSTANDING THAT IT IS STRICTLY CONFIDENTIAL AND MAY NOT BE REPRODUCED OR UTILISED IN ANY WAY WITHOUT PRIOR WRITTEN PERMISSION OF THE COMPANY.

TITLE
PP40RAM (8Mbit)
P.C.B. ASSY.

DRG No.
110-0281
SHT 1 OF 2.

Sht 2 of 2

USED ON

BT-ASI

REMOVE ALL BURRS & SHARP EDGES

THIRD ANGLE PROJECTION

ISS	CHANGES (DETAILS ONLY)

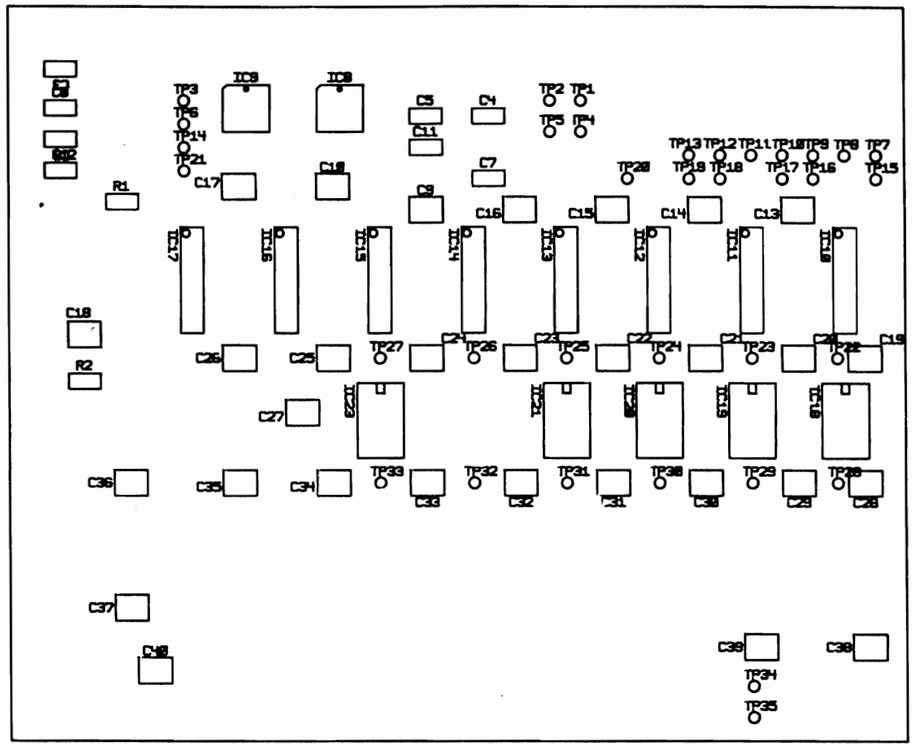

DRAWN C.J.D.									LIMITS UNLESS OTHERWISE STATED	DIMENSIONS IN	SCALE 1:1	stag electronic designs LTD	THIS DRAWING DOCUMENT IS ISSUED BY STAG ELECTRONIC DESIGNS LTD. ON THE UNDERSTANDING THAT IT IS STRICTLY CONFIDENTIAL AND MAY NOT BE REPRODUCED OR UTILISED IN ANY WAY WITHOUT PRIOR WRITTEN PERMISSION OF THE COMPANY.
CHECKED									1 DECIMAL PLACE ± 0.4mm 2 DECIMAL PLACES ± 0.25mm 3 DECIMAL PLACES ± 0.15mm	MATERIAL			
ENGINEERING									ANGLES ± ½°	FINISH		TITLE	DRG No.
APPROVED	1	15·8·88	CIS 1307	T.C.					THREADS TO BS 1580			PP40RAM (8Mbit) P.C.B. ASSY.	110-0281
	ISS	DATE	CHANGE No.	APP	ISS	DATE	CHANGE No.	APP	DIMENSIONS APPLY AFTER FINISHING				SHT 2 OF 2.

SHT 1 OF 2

USED ON

T - ASK!

REMOVE ALL BURRS & SHARP EDGES

THIRD ANGLE PROJECTION

ISS	CHANGES (DETAILS ONLY)

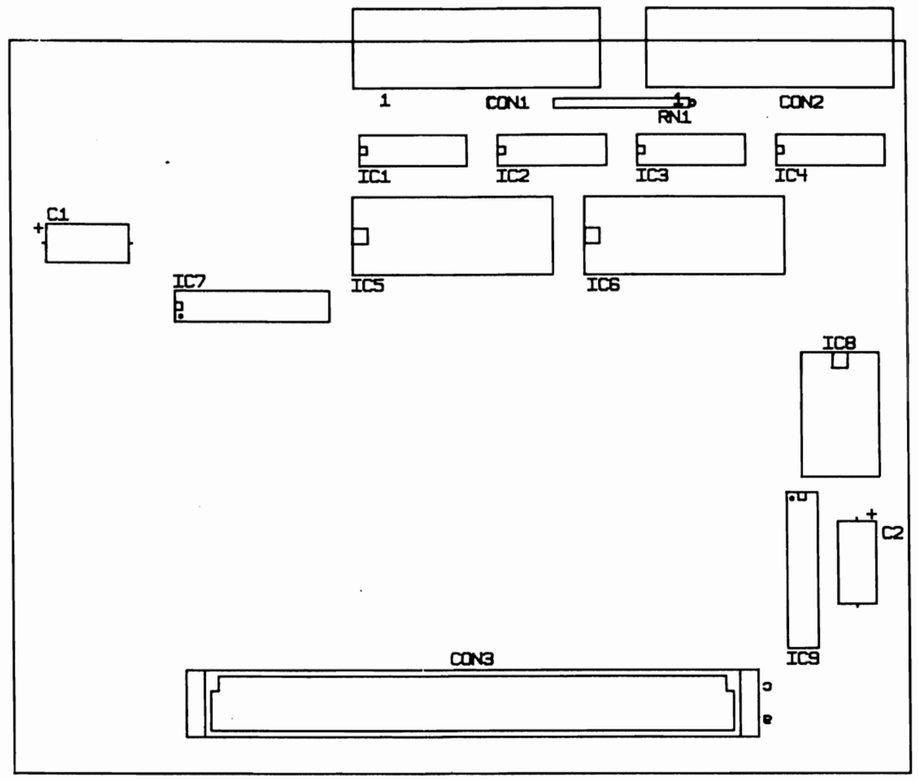

DRAWN H.M.G.									LIMITS UNLESS OTHERWISE STATED
CHECKED									1 DECIMAL PLACE ± 0.4mm 2 DECIMAL PLACES ± 0.25mm 3 DECIMAL PLACES ± 0.15mm
ENGINEERING									ANGLES ± ½°
APPROVED	A	10-10-87	C.I.S. 1113						THREADS TO BS 1580
	ISS	DATE	CHANGE No.	APP	ISS	DATE	CHANGE No.	APP	DIMENSIONS APPLY AFTER FINISHING

DIMENSIONS IN

SCALE 1:1

MATERIAL

FINISH

stag electronic designs LTD

TITLE

PP40 RAM (1Mb)
P.C.B. ASSY.

THIS DRAWING DOCUMENT IS ISSUED BY STAG ELECTRONIC DESIGNS LTD. ON THE UNDERSTANDING THAT IT IS STRICTLY CONFIDENTIAL AND MAY NOT BE REPRODUCED OR UTILISED IN ANY WAY WITHOUT PRIOR WRITTEN PERMISSION OF THE COMPANY.

DRG No.

110-0301

SHT 1 OF 2

SHT 2 OF 2

USED ON

ASK! REMOVE ALL BURRS & SHARP EDGES

THIRD ANGLE PROJECTION

ISS	CHANGES (DETAILS ONLY)

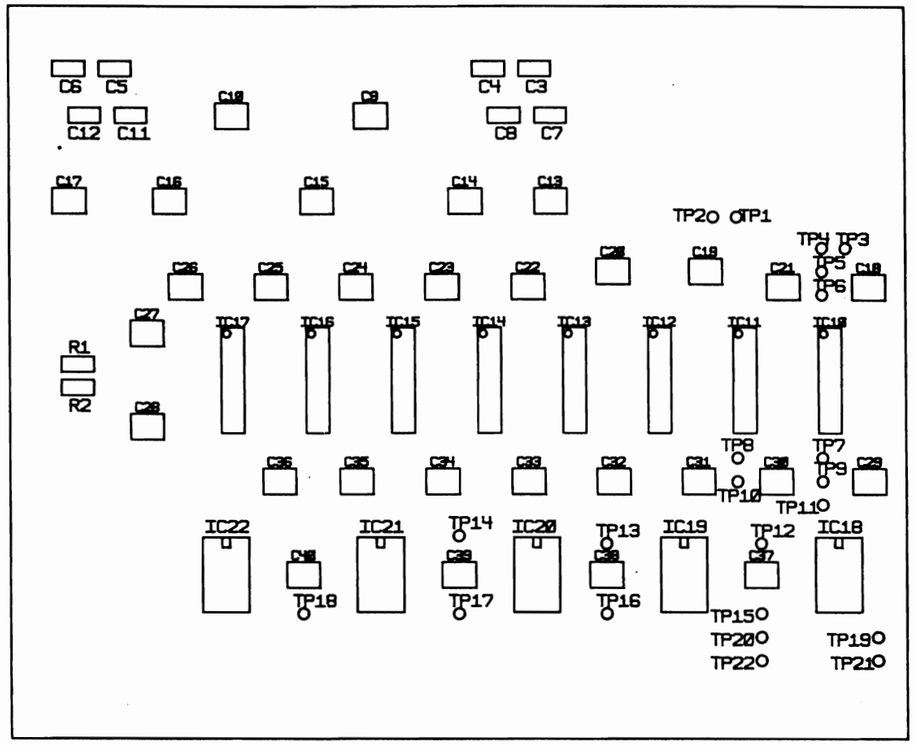

DRAWN H.M.G.									LIMITS UNLESS OTHERWISE STATED	DIMENSIONS IN	SCALE 1:1	stag electronic designs LTD	THIS DRAWING DOCUMENT IS ISSUED BY STAG ELECTRONIC DESIGNS LTD. ON THE UNDERSTANDING THAT IT IS STRICTLY CONFIDENTIAL AND MAY NOT BE REPRODUCED OR UTILISED IN ANY WAY WITHOUT PRIOR WRITTEN PERMISSION OF THE COMPANY.
CHECKED									1 DECIMAL PLACE ± 0.4mm 2 DECIMAL PLACES ± 0.25mm 3 DECIMAL PLACES ± 0.15mm	MATERIAL			
ENGINEERING									ANGLES ± ½°	FINISH		TITLE PP40 RAM (1Mb) P.C.B. ASSY.	DRG No. 110-0301 SHT 2 OF 2
APPROVED	A	10-10-87	C.I.S. 1113						THREADS TO BS 1580				
	ISS	DATE	CHANGE No.	APP	ISS	DATE	CHANGE No.	APP	DIMENSIONS APPLY AFTER FINISHING				

USED ON

3T -

REMOVE ALL BURRS & SHARP EDGES

THIRD ANGLE PROJECTION

ISS	CHANGES (DETAILS ONLY)

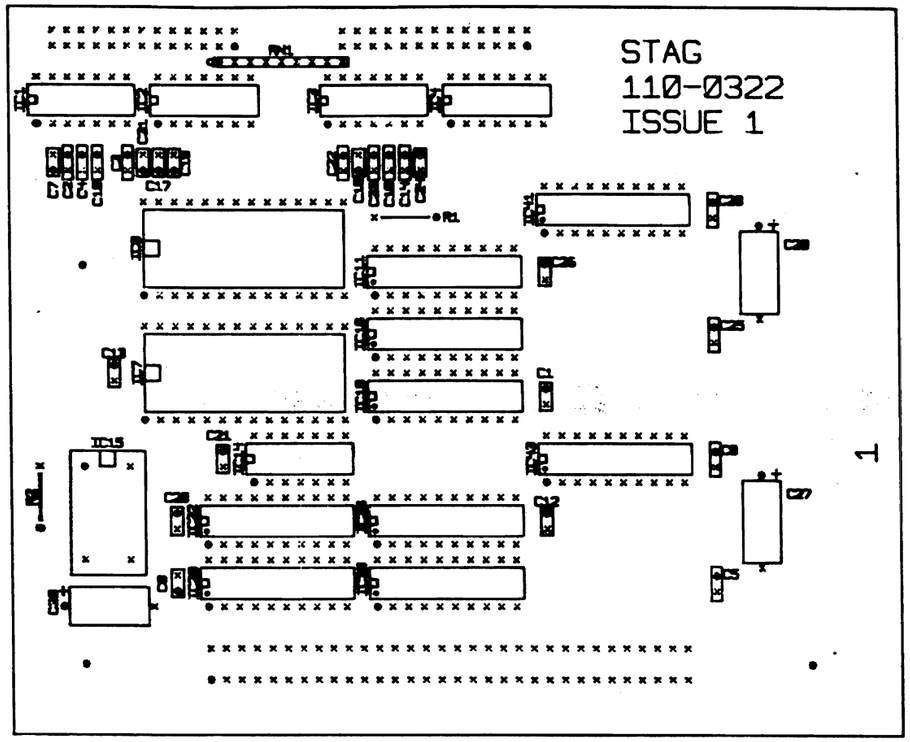

DRAWN HMG								
CHECKED								
ENGINEERING	2	4·4·89	C.I.S 1406					
APPROVED	1	24·11·88	C.I.S. 1341					
	ISS	DATE	CHANGE No.	APP	ISS	DATE	CHANGE No.	APP

LIMITS UNLESS OTHERWISE STATED
1 DECIMAL PLACE ± 0.4mm
2 DECIMAL PLACES ± 0.25mm
3 DECIMAL PLACES ± 0.15mm
ANGLES ± ½°

THREADS TO BS 1580
DIMENSIONS APPLY AFTER FINISHING

DIMENSIONS IN

SCALE 1:1

MATERIAL

FINISH

stag electronic designs LTD

TITLE
ZL33 RAM 2Mb
P.C.B. ASSY.

THIS DRAWING DOCUMENT IS ISSUED BY STAG ELECTRONIC DESIGNS LTD. ON THE UNDERSTANDING THAT IT IS STRICTLY CONFIDENTIAL AND MAY NOT BE REPRODUCED OR UTILISED IN ANY WAY WITHOUT PRIOR WRITTEN PERMISSION OF THE COMPANY.

DRG No. 110-0311

SHT 1 OF 1

USED ON

T- ASK

REMOVE ALL BURRS & SHARP EDGES

THIRD ANGLE PROJECTION

ISS	CHANGES (DETAILS ONLY)

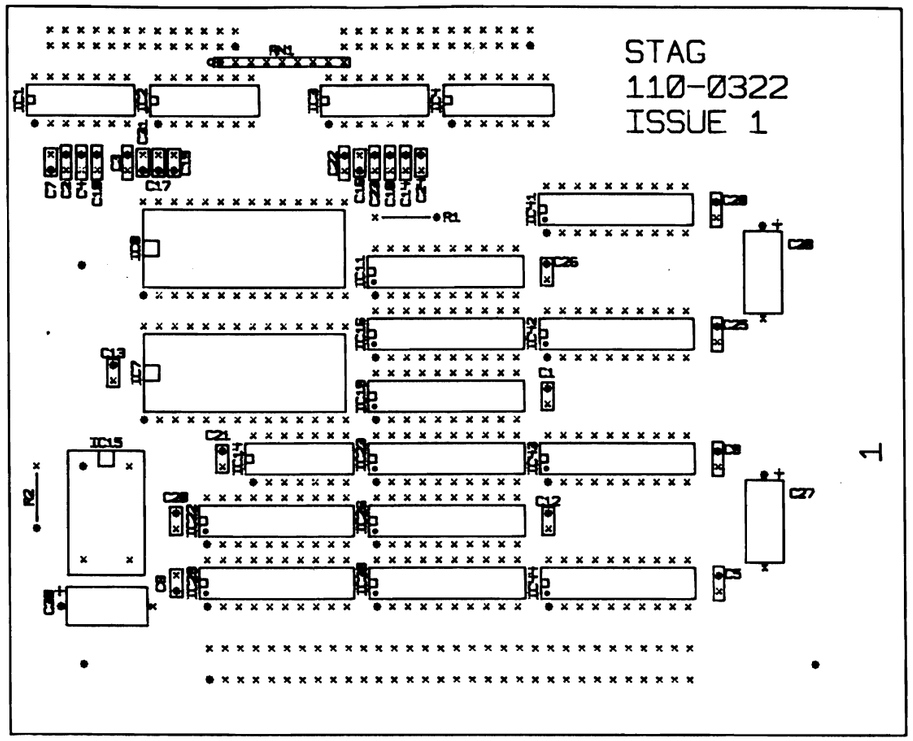

DRAWN HMG									LIMITS UNLESS OTHERWISE STATED
CHECKED									1 DECIMAL PLACE ± 0.4mm 2 DECIMAL PLACES ± 0.25mm 3 DECIMAL PLACES ± 0.15mm
ENGINEERING	2	4·4·89	C.I.S 1406						ANGLES ± ½°
APPROVED	1	24·11·88	C.I.S. 1341						THREADS TO BS 1580
	ISS	DATE	CHANGE No.	APP	ISS	DATE	CHANGE No.	APP	DIMENSIONS APPLY AFTER FINISHING

DIMENSIONS IN

SCALE 1:1

MATERIAL

FINISH

stag electronic designs LTD

TITLE
ZL33 RAM 4Mb
P.C.B. ASSY.

THIS DRAWING DOCUMENT IS ISSUED BY STAG ELECTRONIC DESIGNS LTD. ON THE UNDERSTANDING THAT IT IS STRICTLY CONFIDENTIAL AND MAY NOT BE REPRODUCED OR UTILISED IN ANY WAY WITHOUT PRIOR WRITTEN PERMISSION OF THE COMPANY.

DRG No. 110-0321

SHT 1 OF 1

USED ON

ASK! REMOVE ALL BURRS & SHARP EDGES

THIRD ANGLE PROJECTION

ISS	CHANGES (DETAILS ONLY)

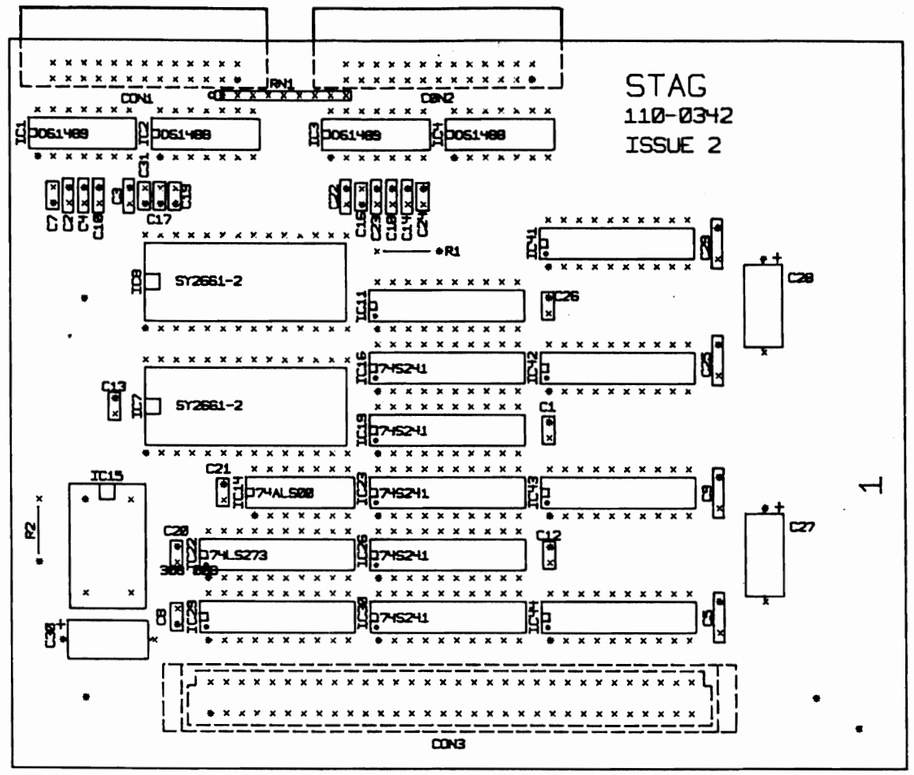

DRAWN R.W.									LIMITS UNLESS OTHERWISE STATED	DIMENSIONS IN	SCALE 1:1	stag electronic designs LTD	THIS DRAWING DOCUMENT IS ISSUED BY STAG ELECTRONIC DESIGNS LTD. ON THE UNDERSTANDING THAT IT IS STRICTLY CONFIDENTIAL AND MAY NOT BE REPRODUCED OR UTILISED IN ANY WAY WITHOUT PRIOR WRITTEN PERMISSION OF THE COMPANY.
CHECKED									1 DECIMAL PLACE ± 0.4mm 2 DECIMAL PLACES ± 0.25mm 3 DECIMAL PLACES ± 0.15mm	MATERIAL			
ENGINEERING	2	30·6·89	CIS 1448						ANGLES ± ½°	FINISH		TITLE PP40 2Mb RAM P.C.B. ASSY.	DRG No. 110-0331
APPROVED	1	4.4.89	CIS 1406						THREADS TO BS 1580				SHT 1 OF 1
	ISS	DATE	CHANGE No.	APP	ISS	DATE	CHANGE No.	APP	DIMENSIONS APPLY AFTER FINISHING				

USED ON

3T - ASK!

REMOVE ALL BURRS & SHARP EDGES

THIRD ANGLE PROJECTION

ISS	CHANGES (DETAILS ONLY)

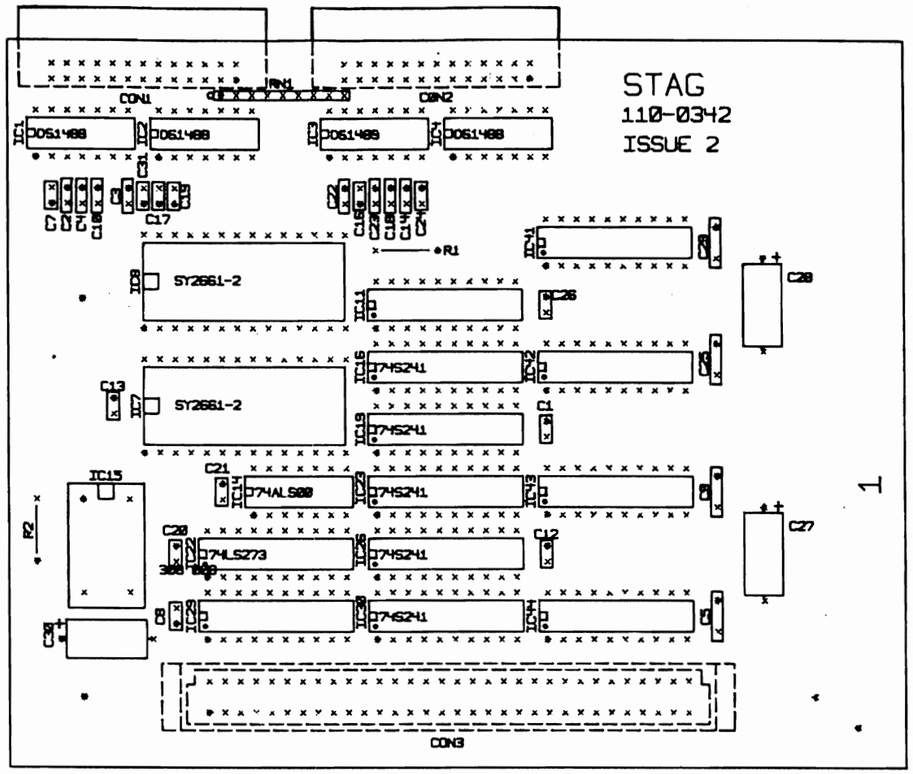

DRAWN R.W.									
CHECKED									
ENGINEERING	2	30-6-89	CIS 1448						
APPROVED	1	4.4.89	CIS 1406						
	ISS	DATE	CHANGE No.	APP	ISS	DATE	CHANGE No.	APP	

LIMITS UNLESS OTHERWISE STATED
1 DECIMAL PLACE ± 0.4mm
2 DECIMAL PLACES ± 0.25mm
3 DECIMAL PLACES ± 0.15mm
ANGLES ± ½°

THREADS TO BS 1580
DIMENSIONS APPLY AFTER FINISHING

DIMENSIONS IN

SCALE 1:1

MATERIAL

FINISH

stag electronic designs LTD

TITLE
PP40 4Mb RAM P.C.B.
ASSY.

THIS DRAWING DOCUMENT IS ISSUED BY STAG ELECTRONIC DESIGNS LTD. ON THE UNDERSTANDING THAT IT IS STRICTLY CONFIDENTIAL AND MAY NOT BE REPRODUCED OR UTILISED IN ANY WAY WITHOUT PRIOR WRITTEN PERMISSION OF THE COMPANY.

DRG No. 110-0341

SHT 1 OF 1